Epple®

Maschinen

www.epple.com GERMANY

ENGLISH

Your reliable partner since 43 years

Machines for Craftsmen and Industry

Metalworking Drilling - Milling - Turning - Sawing - Grinding - Accessories

Main Catalogue 2019

Sheet Metal Forming Bending - Folding - Cutting - Water/Plasma/Laser

since **43 years** **Epple Maschinen®**

since **43 years** **experience with Metal Working Machines**

since **43 years** **constant growth**

since **43 years** **own developments and innovations**

The Company - 43 years of Epple Maschinen®
Founded in 1976, managed by the second generation and with over 30 years of international experience **Epple Maschinen®** offers high-quality metal processing machines with an exceptionally good recommended retail price.

Distribution
Consulting, sales and delivery of **Epple Maschinen®** is carried by well stocked retailers in Germany. Within and even outside the European Union there are regional partners near you.

Retailers
Due to our retailer distribution network there is usually a contact person in your area who guarantees advice and after-sales-service. As a matter of course our service team is also available weekdays from Monday to Friday.

Partners abroad
To this day **Epple Maschinen®** are not only sold in Europe but are also represented by our partners in many countries worldwide.

Market position

Due to the high quality standard and the great price-performance ratio **Epple Maschinen®** are in a good position on the international market. Our products can stand up to any comparison in terms of quality, technology, equipment, stable construction and durability with comparable and equal products and are standing in the first place in terms of technical development.

Service Support

Our service employees will be gladly available for telephonic questions - of course without an expensive hotline.

Trade fairs

We have been exhibitors at important trade fairs in Germany for many years. Outside of Germany **Epple Maschinen®** can be seen at our sales partners and several local fairs.

Development

While preparing a specification book, planning and developing new products we are both customer-oriented and innovative. For years we are maintaining our high position on the constantly changing and evolving market. Our own developments such as our HIGHLINE-Machines or for example our software for the new touch-screen control of the SBH 36 NC Vario are extensively planned, constructed and implemented.

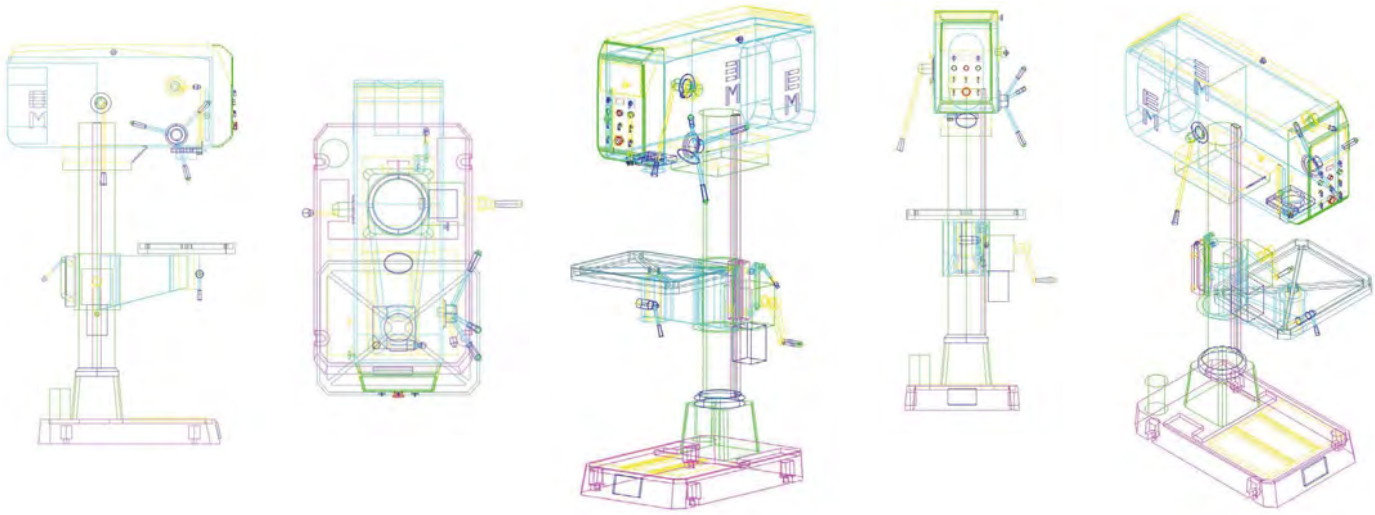

Production

The machines are mainly produced by Joint-Venture companies and original manufacturers in close cooperation. Because of that **Epple Maschinen®** has direct influence in the production and depth of production and are characterised by a lot of detail improvements. Due to this it is possible to produce quality products which our customer trust for more than 43 years now.

Three Product Lines

Epple Maschinen GmbH distributes metal and sheet metal working machines and consist of three product lines:

- Machines for price-conscious, professional workshops or industrial companies according to our specifications and with direct influence on the production and also for demanding users the product lines:
- PREMIUM-Line machines, produced for **Epple Maschinen®** by western industrial and prestigious manufacturers with decades of experience and
- HIGHLINE machines that are engineered and designed by **Epple Maschinen®**

Quality

Epple Maschinen® are produced according to our special requirements with very high quality requirements and direct intervention during the production process. Nearly all of our products are produced by renowned original manufacturers. The quality of **Epple Maschinen®** is ensured by continuous checks during the production and also by final inspections of the finished goods as well as continuous influence on improvement proposals and processes. We are considering this as an indispensable part of quality assurance for the satisfaction of our customers.

Controls

In order to leave nothing to chance regarding the product satisfaction of **Epple Maschinen®**, application tests are performed on all tools and machines both for the finished products and also during the production process.

Techinical Documentation

It goes without saying that **Epple Maschinen®** has a sophisticated and technical perfect user manual, which is also available in digital form.

Delivery Capacity

Our own large warehouse at the companies headquarter in Wiesensteig enables a high delivery capacity. Even large machines that are manufactured for customer-specific orders are available within a short time. Modern data processing support the workflow, orders are processed in no time and products are delivered swiftly.

Spare Parts

Our extinsive spare parts storage in Wiesensteig ensures that **Epple Maschinen®** can be used on longterm.

Consultations and Product Training

Epple Maschinen® are designed for ergonomic and easy operation. For advice and product training our regional retailers or our sales engineers will gladly support you. Demonstration and instruction in machine usage are both available in our headquarters.

Catalogue

The essential technical information of our **Epple Maschinen®** products are included in this catalogue. Further information can be received on request. Our catalogue is available in many different languages online. The whole catalogue is protected by copyright.

Advertising Material

We keep an in-house marketing with the latest equipment for our retail partners at home and abroad.

Website

Please visit our homepage on:

www.epple.com

Environmental Protection

Environmental protection is of great importance for us. We are member of several disposal associations. We separate and recycle our waste and due to ecological wood recycling we are able to heat our company buildings on the state of art.

Special Sale

At Wiesensteig plant, there is a special sale of tested, functional machines at reduced prices. These are e.g. machinery with damages in transit, second quality machines, remaining discontinued models, sample machines or used machines. Special sales machines are available on request.

Epple Maschinen® exerts direct influence on the production.
To facilitate the purchase decision for your claims, requirements and budget as well as to find the suitable machine accordingly to the operation purpose, we divided our brand **Epple Maschinen®** years ago into three product ranges and price categories: standard, PREMIUM-LINE and HIGHLINE.

Standard
Machines made in China/Taiwan for the price-conscious, professional craftsman and the industrial firm **Epple Maschinen®** are manufactured exclusively or in accordance with our standards for years under high quality standards with direct influence on the production. There are similar products on the market that do not reach the quality standards of **Epple Maschinen®**. **Epple Maschinen®** are manufactured by renown manufacturing shops and manufacturers that have been chosen carefully and who can meet our high quality standards. The insights of our experience for decades serve for the continuous further development and improvement of our products. A lively exchange from the planning phase until the finished product through our technically high-qualified team and the place of production is of the utmost importance for us. On-site the products are inspected again by our quality management representative. Thereby you get fully developed, high-quality machines from **Epple Maschinen®** at a remarkably good price-performance ratio.

Therefore products of the **Epple Maschinen®** standard-program partially are copied for years. Hence, decide in favor of the original from **Epple Maschinen®**. Please ask us for your next dealer in your country.

Especially for the demanding user who is intent on industrial quality we offer the two product lines **Epple Maschinen®** PREMIUM-LINE and **Epple Maschinen®** HIGHLINE:

PREMIUM-LINE

Product line Epple Maschinen®
PREMIUM-LINE-machines for the demanding user.

All machines of the PREMIUM-LINE product line are manufactured by renown, occidental industrial producers with decades of experience for the brand name **Epple Maschinen®**. The product's characteristics are robustness, operator convenience and functionality. These features will contribute to your business productivity - **machines for an exacting user**.

HIGHLINE

New product line Epple Maschinen®
HIGHLINE - "ENGINEERED AND DESIGNED" BY EPPLE MASCHINEN®

HIGHLINE products may only be bought from **Epple Maschinen GmbH**. The machines are developed modernly and in a fastidious design. From the concept drawings, technical development on CAD computer, construction phase of the virtual 3D-machine up to the fabrication on modern CNC-machines **Epple Maschinen GmbH** has the permanent and decisive control of the product development. The outstanding performance level of our new HIGHLINE-series assures you highest quality at an unequalled priceperformance ratio in this industry machine category.

DRILLING 17 - 34

TB 23-230 V / TB 23-400 V 17

SBS 23-230 V / SBS 23-400 V 18 - 19

SBS 32 18 - 19

TBH 24 / TBH 24 VARIO 20 - 21

SBH 28 / SBH 28 VARIO 20 - 21

SBH 36 / SBH 36 VARIO 20 - 21

SBH 36 NC VARIO 20 - 21

SB 40 / SB 40 K 22 - 23

SB 55 SV 24 - 25

H-SB 60 FV HIGHLINE 26 - 27

H-SB 60 NC HIGHLINE 28 - 29

GB 32 / GB 33 30 - 31

GB 50 V 32 - 33

RB 40 34

ACCESSORIES:

MACHINE VICE MSE / MSI 260

MACHINE VICE MS 261

MACHINE VICE MSS 262

DRILL SET / MORSE TAPER DRILL CASE 268

REDUCING SLEEVES 270

MILLING 36 - 56

BFM 16 VARIO / BFM 20 VARIO 36 - 37

BFM 20 L VARIO / BFM 35 VARIO 36 - 37

BFM 45 PG / BFM 45 PG VARIO 38 - 39

BFM 45 PGV / BFM 45 PGDV DIGI 38 - 39

BFM 50 PG 40 - 41

FM 50 S / FM 50 S DIGI 42 - 43

UFM 80 DIGI 44 - 45

CONTENTS

CONTENTS

MILLING	**36 - 56**
WFM 80 DIGI	46
DF 2 DIGI / DF 4 DIGI	47
VFM 95 / VFM 95 DIGI	48
VHFM 95 / VHFM 95 DIGI	49
UFM 100 DIGI	50 - 51
UFM 200 DIGI	52 - 53
VFM 240 / VFM 240 DIGI	54
VHFM 240 / VHFM 240 DIGI	55
HFM 1560 / HFM 2060	56
HFM 2580 / HFM 3080	56
ACCESSORIES:	
MILLING VICES	264
CROSS TABLES	266
MORSE TAPER	270
CLAMP KIT	271
COLLET CHUCKS	272
TURNING	**58 - 72**
TU 1803 VARIO / TU 2004 VARIO	58
TU 2406 / TU 2406 VARIO	59
TU 2506 / TU 2506 VARIO	60
TU 2807 / TU 2807 VARIO	61
TU 3018 / TU 3018 VARIO	61
MD 300-910 / MD 300-910 DIGI	62 - 63
MD 360-1.000 / MD 360-1.000 DIGI	64 - 65
MD 360-1.000 S DIGI	64 - 65
TU 4210 / TU 4210 DIGI	66 - 67
TU 4610 / TU 4610 DIGI	68 - 69
TU 4615 / TU 4615 DIGI	68 - 69
TU 5615 DIGI / TU 5620 DIGI	70 - 72
TU 5630 DIGI / TU 6615 DIGI	70 - 72
TU 6620 DIGI / TU 6630 DIGI	70 - 72

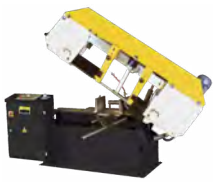

SAWING	**74 - 128**
BS 125 GS	74
BS 128 DG	75
BS 151 GS	76
BS 180 / BS 180 G	77
BS 230 V / BS 230 VG	78
BS 275 G / 275 GS / 275 GF	79
BS 280 DGS / BS 280 DGF	80
BS 350 DG / BS 350 DGH / BS 350 DGHF	81
E-BS 230 DG / E-BS 230 DGH PREMIUM-LINE	82
E-BS 230 V PREMIUM-LINE	82
E-BS 270 DG / E-BS 270 DGH PREMIUM-LINE	83
E-BS 320 H / E-BS 320 V PREMIUM-LINE	84
E-BS 320 HL / E-BS 320 VL PREMIUM-LINE	85
E-BS 320 GV / E-BS 320 GVL PREMIUM-LINE	86 - 87
E-BSP 325 GH / E-BPS 325 GV PREMIUM-LINE	88 - 89
E-BSP 330 NC PREMIUM-LINE	90
E-BSPC 330 NC PREMIUM-LINE	91
E-BS 360 DGH ECO PREMIUM-LINE	92 - 93
E-BS 360 DGH / E-BS 440 DGH PREMIUM-LINE	94 - 95
E-BSP 360 GV / E-BSP 440 GV PREMIUM-LINE	96 - 97
E-BSP 360 DGH / E-BSP 440 DGH PREMIUM-LINE	98 - 99
E-BS 440 V PREMIUM-LINE	100 - 101
E-BSP 540 GH PREMIUM-LINE	102 - 103
E-BSP 560 DGH PREMIUM-LINE	104 - 105
E-BSP 570 CNC PREMIUM-LINE	106 - 107
E-BSP 650 DGH NC PREMIUM-LINE	108 - 109
E-BSP 810 GH PREMIUM-LINE	110
E-BSP 820 H PREMIUM-LINE	111
E-BSP 1.020 H PREMIUM-LINE	112 - 113
E-BSP 1.110 H / E-BSP 1.110 HL PREMIUM-LINE	114 - 115
E-BSP 1.313 H / E-BSP 1.515 H PREMIUM-LINE	116 - 117

CONTENTS

CONTENTS

SAWING	**74 - 128**
KKS 315 L / KKS 315 SA	118
E-MKS 315 / E-MKS 315 P / E-MKS 315 SA	119
E-KKS 350 V PREMIUM-LINE	120 - 121
AKS 400	122
E-UAKS 400 / E-UAKS 450 / E-UAKS 550	123
E-AKS-F 350 / E-AKS-F 400 PREMIUM-LINE	124
E-AKS 315 NC PREMIUM-LINE	125
E-AKS 2L-420 / E-AKS 2L-450 / E-AKS 2L-500	126
TM 350	127
VBS 400 / VBS 500 / VBS 585	128
GRINDING	**130 - 140**
DS 150 / DS 175 / DS 200-400V	130
ISM 250 / ISM 250 F	131
TBSM 100-2	132
BSM 75 / BSM 75-2 / BSM 150	132
BSM 150-2 / BSM 220	133
KRBS 100	134
E-KRBS 100-90 / E-KRBS 100-170	135
RSM 114 PREMIUM-LINE	136
FPSM 4020 / FPSM 5025	137
FPSM 6030 / FPSM 8040	137
E-ZB BSM 2.100 PREMIUM-LINE	138 - 139
FSM 500	140
METAL FORMING	**142 - 154**
UB 40 / WB 100 / UBM	142
RB 10 T / RBE 10 T	143
E-TBM 60 / E-TBM 76 NC PREMIUM-LINE	144
E-RDBM 42 / E-RDBM 76 PREMIUM-LINE	145

METAL FORMING	**142 - 154**
SM 08	146
E-SM 12 / E-SM 12 MP PREMIUM-LINE	147 - 148
E-SM 25 MP PREMIUM-LINE	149
E-SM 40 MP PREMIUM-LINE	150
ROLLER SETS FOR CRIMPING MACHINES	151
E-FFM 10-3,0 / E-FFM 12-3,3 PREMIUM-LINE	152
E-FFM 12-4,0 / E-FFM 12-4,1 PREMIUM-LINE	152
E-FFM 12-4,3 PREMIUM-LINE	152
E-PFM 13 PREMIUM-LINE	153
E-BKS 6 / E-BKS 8 PREMIUM-LINE	154
FOLDING	**156 - 164**
AKB 1.020-2,5 / AKB 1.020-2,5 G	156 - 157
AKB 2.020-2,0	158
AKB-S 1.220-0,8 / AKB-S 2.040-0,8	159
AKB-S 2.540-0,8 / AKB-S 3.040-0,8	159
MAKB 1.250-1,6 / MAKB 2.500-1,6	160 - 161
MAKB 3.200-1,2	160 - 161
AKB 2.020-1,5 E / AKB 2.020-1,5 ES	162 - 163
AKB 2.520-1,0 E / AKB 2.520-1,0 ES	162 - 163
AKB 3.020-1,0 E / AKB 3.020-1,0 ES	162 - 163
E-AKBM 2.050-4,5 / E-AKBM 2.550-3,5 PREMIUM-LINE	164
ROUND BENDING MACHINES	**166 - 208**
RM 1.020-1,5 / RME 1.020-1,5	166
RME 1.300-1,5	167
E-RB 1.050-2,0 / E-RB 1.270-1,5 PREMIUM-LINE	168
E-RB 1.550-1,2 / E-RB 2.050-1,0 PREMIUM-LINE	168
E-RME 1.050-2,0 / E-RME 1.270-1,5 PREMIUM-LINE	169
E-RME 1.550-1,2 / E-RME 2.050-1,0 PREMIUM-LINE	169
E-RBE 1.050-3,0 / E-RBE 1.270-2,5 PREMIUM-LINE	170

CONTENTS

CONTENTS

ROUND BENDING MACHINES 166 - 208

E-RBE 1.550-2,0 / E-RBE 2.050-1,5 PREMIUM-LINE 170

E-RBE-H 1.270-2,5 / E-RBE-H 1.550-2,0 PREMIUM-LINE 171

E-RBE-H 2.050-1,5 PREMIUM-LINE 171

E-RWE 1.050-3,0 / E-RWE 1.270-2,5 PREMIUM-LINE 172

E-RWE 1.550-2,0 / E-RWE 2.050-1,5 PREMIUM-LINE 172

E-RBM 1.270-4,0 / E-RBM 1.550-4,0 PREMIUM-LINE 173

E-RBM 2.050-3,0 PREMIUM-LINE 173

E-RBM-S PRO MODELS PREMIUM-LINE 174

E-3RBM PRO UHS MODELS PREMIUM-LINE 175

E-RBM-H PRO MODELS PREMIUM-LINE 176 - 177

E-3RBM PRO HS MODELS PREMIUM-LINE 178 - 179

E-3RBM PRO HSS MODELS PREMIUM-LINE 180 - 181

E-4KRB-H 1.050-3,0 / E-4KRB-H 1.050-4,0 182

E-4RBM 1.050-5,0 / E-4RBM 1.550-4,0 PREMIUM-LINE 183

E-4RBM 2.050-3,0 PREMIUM-LINE 183

E-4RBM-H NC MODELS PREMIUM-LINE 184

E-4RBM PRO HS MODELS PREMIUM-LINE 185

E-4RBM PRO HSS MODELS PREMIUM-LINE 186 - 187

E-4RBM PRO HMS MODELS PREMIUM-LINE 188 - 191

PW 10 M / PW 30 / PW 30 HV 192

PW 40 HV / PW 50 193

E-PW 31 F / E-PW 35 F / E-PW 40 F 196

E-PW 50 H / E-PW 60 H 197

E-PW 70 H 198

E-PW 65 H / E-PW 80 H 199

E-PW 100 H / E-PW 120 H 200

E-PW 160 DP / E-PW 180 DP 201

E-PW 160 H / E-PW 200 H 202

E-PW 240 H / E-PW 360 H 203

E-4PW 40 H / E-4PW 70 H 207

E-4PW 90 H / E-4PW 110 H 207

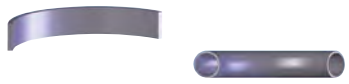

ACCESSORIES PROFIL ROLLER MACHINES:

PROFILE ROLLERS / ROLLER SETS	194 - 208
PW-MODELS	194 - 195
E-PW-MODELS PREMIUM-LINE	204 - 206
E-4PW-MODELS PREMIUM-LINE	208
CUTTING	**210 - 236**
EK 1 / EK 2 / EK 3 / EK 8-E	210
AM 4T / AM 4T-3,0 / AM 4PT	211
E-HAM 6 V	212
E-KS 1,8 M PREMIUM-LINE	213
E-KS 3,5 / E-KS 5,0 M PREMIUM-LINE	214
HS 125 / HS 150 / HS 300	215
TFS 1.050-1,0	216
E-TFS 1.050-1,5 / E-TFS 1.350-1,5 PREMIUM-LINE	217
E-MTSK-MODELS PREMIUM-LINE	218 - 219
E-MTBS-MODELS PREMIUM-LINE	220
E-HTBS-MODELS PREMIUM-LINE	221
E-HSTS-MODELS PREMIUM-LINE	221
E-HTS-MODELS PREMIUM-LINE	222
E-PPSM-MODELS PREMIUM-LINE	223
E-IPSM-MODELS PREMIUM-LINE	224 - 225
E-LSA-MODELS PREMIUM-LINE	226 - 227
E-HPS 40 PREMIUM-LINE	228
E-HPS 45 / E-HPS 60 PREMIUM-LINE	229
E-HPS 55 / E-HPS 65 PREMIUM-LINE	230
E-HPS 65 V PREMIUM-LINE	231
E-HPS 85 / E-HPS 115 / E-HPS 175 PREMIUM-LINE	232 - 233
E-HLS 30 / E- HLS 65 / E-HLS 85 PREMIUM-LINE	234
E-HLS 115 / E-HLS 175 PREMIUM-LINE	234
E-HLS DP-MODELS PREMIUM-LINE	235

CONTENTS

CONTENTS

BENDING MACHINE 238 - 254

DDP 2 / DDP 3 / DDP 5 236

E-HBP 10 PREMIUM-LINE 238

E-HBP 22 / E-HBP 40 PREMIUM-LINE 239

E-HBP 80 PREMIUM-LINE 240

HAKP 24 / HAKP 48 PREMIUM-LINE 241

HWP 30 T / HWP E 30 T PREMIUM-LINE 242

E-HWP 500-10 / E-HWP 500-20 PREMIUM-LINE 243

E-HWP 600-30 PREMIUM-LINE 243

E-WP-MODELS PREMIUM-LINE 246 - 247

E-WPK 1.070-100 / E-WPK 1.070-150 PREMIUM-LINE 248

E-WPK 1.570-100 / E-WPK 1.570-150 PREMIUM-LINE 248

E-WPR 1.570-100 / E-WPR 1.570-150 PREMIUM-LINE 249

E-WPR 1.900-200 PREMIUM-LINE 249

E-UWP 1.020-100 / E-UWP 1.020-150 PREMIUM-LINE 250

E-UWP 1.520-100 / E-UWP 1.520-150 PREMIUM-LINE 250

E-AP 1.020-100 / E-AP 1.020-150 PREMIUM-LINE 251

E-AP 1.520-100 / E-AP 1.520-150 PREMIUM-LINE 251

E-GBP-MODELS PREMIUM-LINE 252 - 254

WELDING POSITIONER AND THREAD CUTTING MACHINE 256 - 258

ACCESSORIES 260 - 290

Drilling

Standard Equipment:	TB 23- 230 V	TB 23 -400 V	SBS 23-230 V	SBS 23-400 V	SBS 32	TBH 24	TBH 24 Vario	SBH 28	SBH 28 Vario	SBH 36	SBH 36 Vario	SBH 36 NC Vario	SB 40	SB 40 K	SB 55 SV	H-SB 60 FV HIGHLINE	H-SB 60 NC HIGHLINE	GB 32	GB 33	GB 50 V
Altering current motor 230 Volt, 50 Hz	•		•			•			•		•	•								
Three-Phase motor 400 V, 50 Hz		•		•	•	•	•	•		•			•	•	•	•	•	•	•	•
Motorsteps								2	2	2	2	2	2	2	2	2	2	2	2	2
RÖHM-Quick action drill chuck 1-13 mm		•	•	•	•	•	•	•	•											
RÖHM-Quick action drill chuck 3-16 mm										•	•	•	•	•	•	•	•	•	•	•
Speed display, digital (LED)			•	•		•	•	•	•	•	•	•			•	•	•			
Speed adjustment stepless			•	•			•		•		•	•			•	•	•			
Forward/Reverse		•		•	•	•	•	•	•	•	•	•	•	•	•	•	•	•	•	•
Spindle protection with electric fuse						•	•	•	•	•	•	•			•	•	•	•	•	•
Manual drill depth stop	•	•	•	•	•	•	•	•	•	•	•	•	•	•	•	•	•	•	•	•
Digital drill depth stop										•	•	•				•	•			
Threading (series)											•	•				•	•	•	•	•
Automatic feed															•	•	•	•	•	•
Coolant system								•	•	•	•	•		•	•	•	•	•	•	•
Working light	•	•	•	•	•	•	•	•	•	•	•	•	•	•	•	•	•	•	•	•
Bench drill	•	•				•	•													
Column drill			•	•	•			•	•	•	•	•	•	•	•	•	•			
Gear drill																		•	•	•
Technical information:																				
Drilling capactity in steel max. Ø (in mm)	23	23	23	23	32	24	24	28	28	34	34	34	40	40	50	60	60	35	35	50
Spindle taper (MT)	2	2	2	2	4	2	2	3	3	4	4	4	4	4	4	4	4	4	4	4
Spindle stroke (in mm)	80	80	80	80	120	85	85	105	105	160	160	160	120	120	160	200	200	180	180	240
Working range (in mm)	180	180	180	180	255	165	165	200	200	285	285	285	215	215	320	350	350	350	350	370
Column drill (in mm)	80	80	80	80	90	80	80	92	92	115	115	115	100	100	110	175	175	150	150	200
Speed range (min^{-1})	120 - 2.580	120 - 2.580	120 - 2.580	120 - 2.580	150 - 2.700	360 - 4.200	100 - 4.400	120 - 4.250	35 - 6.100	130 - 4.940	40 - 6.500	40 - 6.500	150 - 1.920	150 - 1.920	85 - 1.900	40 - 4.000	40 - 4.000	50 - 1.450	50 - 1.450	40 - 2.100
Machine table, usable bearing (L x D) (in mm)	290 x 290	290 x 290	290 x 290	290 x 290	425 x 475	280 x 300	300 x 280	360 x 340	360 x 340	400 x 420	400 x 500	400 x 500	315 x 410	315 x 410	425 x 500	400 x 500	400 x 500	550 x 550	550 x 550	500 x 600
Motor power (kW)	0,55	0,55	0,55	0,55	0,7	0,75	1,5	0,85/ 1,5	1,5	2,2	2,2	2,2	1,9	1,9	1,7	5	5	1,5	1,5	2,8
Weight (kg)	56	56	60	60	120	120	120	200	200	360	360	360	235	245	450	780	780	450	470	660

TB 23-230 V / TB 23-400 V

BENCH DRILL MT 2 UP TO 23 MM

PIC.: TB 23-400 V

- » solid construction suitable for craftsmen users
- » precision of concentricity < 0,02 mm measured in the spindle sleeve
- » belt housing in steel, locked cover with safety shutdown
- » powerful, smooth running electric motor, aluminum body with cooling fins
- » 400 V model with forward and reverse run
- » safety switch with low-voltage release and emergency stop
- » rotating, tilting and inclinable massive working table with T-slots for 16 mm sliding blocks
- » comfortable mechanical height adjustment of drilling table by toothed rack
- » solid, large dimensioned base plate with T-slots, precise surface finishing
- » LED working light
- » RÖHM quick-action drill chuck supplied 1-13 mm
- » drill chuck guard
- » drill depth stop

You can find detailed equipment at page 259.
Information about the flow-hole moulding process on page 269.

Description	TB 23
drilling performance	23 mm
sleeve travel	80 mm
spindle taper	MT 2
spindle speed	120 - 2.580 min^{-1}
no. of speeds	12
automatic drilling feed	no
working range	180 mm
table size	290 x 290 mm
T-slot size (table)	16 mm
T-slot number (table)	2 (diagonal)
drilling table swivel	±45°
column diameter	80 mm
motor power	550 Watt
dimensions (W x D x H)	300 x 500 x 980 mm
weight	56 kg
Type	**230 V**
EAN	**4260364290011**
Item no.	**210 0023**

Type	400 V
EAN	**4260364290028**
Item no.	**210 0123**

SBS 23-230 V / SBS 23-400 V
SBS 32

COLUMN DRILLING MACHINES

PIC.: SBS 23-230 V

PIC.: SBS 32

View page 19 for technical details.

SBS 23-230 V / SBS 23-400 V / SBS 32

» solid construction suitable for craftsmen users
» precision of concentricity < 0,02 mm measured in the spindle sleeve
» belt housing in steel, locked cover with safety shutdown
» powerful, smooth running electric motor, aluminum body with cooling fins
» 400 V model with forward and reverse run
» safety switch with low-voltage release and emergency stop
» rotating, tilting and inclinable massive working table with T-slots for 16 mm sliding blocks
» comfortable mechanical height adjustment of drilling table by toothed rack
» solid, large dimensioned base plate with T-slots, precise surface finishing
» LED working light
» RÖHM quick-action drill chuck supplied 1-13 mm
» drill chuck guard
» drill depth stop

Optional Equipment

	Description	Art.-No.		Description	Art.-No.
	Quick Action Drill Chuck RÖHM 1-13 mm	510 3013		MS 125	120 0125
	Quick Action Drill Chuck RÖHM 3-16 mm	510 3016		UPS 100	520 4010
	HSS Drill Bit Set	510 9013		Morse Taper Drill Case 1	510 1423
	MSE 75	121 0075		Morse Taper Drill Case 2	510 1430
	MSE 100	121 0100		Morse Taper	-
	MSE 125	121 0125		Reducing Sleeves	-
	MSE 150	121 0150		Extension Sleeves	-
	MSI 100	121 2100			
	MSI 140	121 2140			
	MSI 200	121 2200			
	MS 100	120 0100			

You can find detailed equipment at page 259.

Description	SBS 23
drilling cap in steel	23 mm
sleeve travel	80 mm
spindle taper	MT 2
spindle speeds	120 - 2.580 min^{-1}
no. of speeds	12
automatic drilling feed	no
working range	180 mm
table size	290 x 290 mm
T-slot size (table)	16 mm
T-slot number (table)	2 (diagonal)
drilling table swivel	±45°
column diameter	80 mm
motor power	550 Watt
dimensions (W x D x H)	310 x 550 x 1.480 mm
weight	85 kg
	230 V
EAN	**4260364290059**
Item No.	**215 0023**

	400 V
EAN	**4260364290066**
Item No.	**215 0123**

Description	SBS 32
drilling cap in steel	32 mm
sleeve travel	120 mm
spindle taper	MT 4
spindle speeds	150 - 2.700 min^{-1}
no. of speeds	12
automatic drilling feed	no
working range	255 mm
table size	475 x 425 mm
T-slot size (table)	18 mm
T-slot number (table)	3
drilling table swivel	±45°
column diameter	90 mm
motor power	400 V / 1,1 kW
dimensions (W x D x H)	500 x 700 x 1.750 mm
weight	137 kg
	SBS 32
EAN	**4260364290073**
Item No.	**210 0132**

TBH 24 / TBH 24 VARIO / SBH 28 SBH 28 VARIO / SBH 36 / SBH 36 VARIO SBH 36 NC VARIO

BENCH AND COLUMN DRILLING MACHINES

PIC.: TBH 24 VARIO

PIC.: SBH 28

PIC.: SBH 36 VARIO

Technical Data SBH 28 Vario / SBH 36 / SBH 36 Vario / SBH 36 NC Vario on page 21.

Description	TBH 24	TBH 24 Vario	SBH 28
drilling cap in steel	24 mm	24 mm	28 mm
sleeve travel	85 mm	85 mm	105 mm
spindle taper	MT 2	MT 2	MT 3
spindle speeds	360 - 4.200 min^{-1}	100 - 4.400 min^{-1}	120 - 4.250 min^{-1}
no. of speeds (over wedge straps)	7	4	16
automatic drilling feed	no	no	no
working range	165 mm	165 mm	200 mm
table size	280 x 300 mm	280 x 300 mm	340 x 360 mm
T-slot size (table)	14 mm	14 mm	14 mm
T-slot number (table)	2 (diagonal)	2 (diagonal)	2 (diagonal)
column diameter	80 mm	80 mm	92 mm
distance spindle to table max.	515 mm	495 mm	858 mm
distance spindle to foot max.	681 mm	681 mm	1.270 mm
motor power	400 V / 50 Hz / 750 Watt	230 V / 50 Hz / 1,5 kW	400 V / 50 Hz / 0,85 kW / 1,5 kW
dimensions (W x D x H)	515 x 740 x 1.170 mm	515 x 740 x 1.170 mm	575 x 840 x 1.750 mm
weight	120 kg	120 kg	200 kg
	TBH 24	**TBH 24 Vario**	**SBH 28**
EAN	**4260364290035**	**4260364290042**	**4260364290080**
Item No.	**210 6024**	**210 6124**	**215 6028**

TBH 24 / TBH 24 VARIO
SBH 28 / SBH 28 VARIO
SBH 36 / SBH 36 VARIO
SBH 36 NC VARIO
BENCH AND COLUMN DRILLING MACHINES

NEW

PIC.: DISPLAY COVER

N-BEDIENUNG
AND DESIGNED
MASCHINEN®

- Bench drill and drill press in raised execution for handcraft and industrial use
- the running accuracy measured smaller 0,02 mm in the drilling barrel
- belt cover out of metal with safety shutdown
- high-grade two step aluminium electric motor with cooling fins aluminium electric motor with cooling fins - model Vario with continuously rotation speed control via frequency converter
- digital LED-rotation speed display
- high turning movement
- switch for clockwise/anticlockwise rotation
- SBH 36 Vario with operating type reaming/auto
- precise surface processing, massive and stable work table, pivotable, slewable, inclinable with T-slots with 16 mm sliding blocks
- comfortable mechanical height adjustment for the table via rack
- large and massive base plate with T-slots, precise surface processing
- integrated establishment for coolant with coolant tank (**only model SBH 28 Vario and SBH 36 Vario**)
- LED working light
- **model TBH 24 and TBH 24 Vario**: with RÖHM-quick-release chuck supplied as standard 1-13 mm
- **model SBH 28 and 36**: with RÖHM-quick-release chuck supplied 1-13 mm as standard
- digital drilling depth display (**only model SBH 36**)

Description	SBH 28 Vario	SBH 36	SBH 36 Vario	SBH 36 NC Vario
drilling cap in steel	28 mm	34 mm	34 mm	34 mm
sleeve travel	105 mm	160 mm	160 mm	160 mm
Spindle taper	MT 3	MT 4	MT 4	MT 4
spindle speeds	35 - 6.100 min^{-1}	130 - 4.940 min^{-1}	40 - 6.500 min^{-1}	40 - 6.500 min^{-1}
no. of speeds (via V-belts adjust)	12	9	9	9
speed via potentiometer	stepless	no	stepless	stepless
automatic drilling feed	no	no	no	no
working range	200 mm	285 mm	285 mm	285 mm
table size	340 x 360 mm	420 x 400 mm	400 x 500 mm	400 x 500 mm
T-slot size (table)	14 mm	14 mm	14 mm	14 mm
T-slot number (table)	2 (diagonal)	2 (diagonal)	2 (diagonal)	2 (diagonal)
column diameter	92 mm	115 mm	115 mm	115 mm
distance spindle to table	max. 765 mm	max. 790 mm	max. 790 mm	max. 790 mm
distance spindle to foot max.	1.200 mm	1.270 mm	1.270 mm	1.270 mm
motor power	230 V / 50 Hz / 1,5 kW	400 V / 1,5 kW / 2,2 kW	230 V / 2,2 kW	230 V / 2,2 kW
dimensions (W x D x H)	575 x 840 x 1.750 mm	560 x 910 x 1.935 mm	560 x 910 x 1.935 mm	560 x 910 x 1.935 mm
weight	200 kg	360 kg	360 kg	360 kg
	SBH 28 Vario	**SBH 36**	**SBH 36 Vario**	**SBH 36 NC Vario**
EAN	**4260364290097**	**4260364290103**	**4260364290110**	**4260364295689**
Item No.	**215 6128**	**215 6036**	**215 6136**	**215 6236**

PIC.: SBH 36 NC VARIO WITH DISPLAY

SB 40 / SB 40 K

COLUMN DRILLING MACHINES

PIC.: SB 40

Description	SB 40	SB 40 K
drilling cap in steel	40 mm	40 mm
sleeve travel	120 mm	120 mm
spindle taper	MT 4	MT 4
spindle speeds	150 - 1.920 min^{-1}	150 - 1.920 min^{-1}
no. of speeds	10	10
automatic drilling feed	no	no
working range	215 mm	215 mm
table size	410 x 315 mm	410 x 315 mm
T-slot size (table)	16 mm	16 mm
T-slot number (table)	2	2
drilling table swivel	±45°	±45°
column diameter	100 mm	100 mm
motor power	400 V / 1,1 kW / 1,9 kW	400 V / 1,1 kW / 1,9 kW
dimensions (W x D x H)	470 x 800 x 1.700 mm	470 x 800 x 1.700 mm
weight	235 kg	245 kg
	SB 40	**SB 40 K**
EAN	**4260364290127**	**4260364290134**
Item No.	**115 0440**	**115 0445**

SB 40 K:
WITH COOLANT DEVICE

SB 40 / SB 40 K

» solid construction suitable for craftsmen and industrial use
» lasting value
» high-quality 2-step aluminum motor with cooling fins
» concentricity precision < 0,02 mm measured in the spindle sleeve
» belt housing in steel, interlocked, with safety shutdown function
» **model: SB 40 K with coolant device**
» switch for clockwise/anticlockwise rotation
» high turning movement
» massive and ground tie bar
» precise surface processing, massive and stable work table, pivotable and inclinable with T-slots with16 mm sliding blocks
» comfortable machanical height adjustment for the table via rack
» high stability and a stabile lever
» LED working light
» RÖHM quick-action drill chuck supplied as standard 3-16 mm
» drill chuck guard
» drill depth stop

Optional Equipment

	Description	Art.-No.			Description	Art.-No.	
	Quick Action Drill Chuck RÖHM 1-13 mm	510 3013			MS 125	120 0125	
	Quick Action Drill Chuck RÖHM 3-16 mm	510 3016			UPS 100	520 4010	
	HSS Drill Bit Set	510 9013			Morse Taper Drill Case 1	510 1423	
	MSE 75	121 0075			Morse Taper Drill Case 2	510 1430	
	MSE 100	121 0100			Morse Taper	-	
	MSE 125	121 0125			Reducing Sleeves	-	
	MSE 150	121 0150			Extension Sleeves	-	
	MSI 100	121 2100					
	MSI 140	121 2140					
	MSI 200	121 2200					
	MS 100	120 0100					

You can find detailed equipment at page 259.

SB 55 SV

COLUMN DRILLING MACHINE

PIC.: SB 55 SV

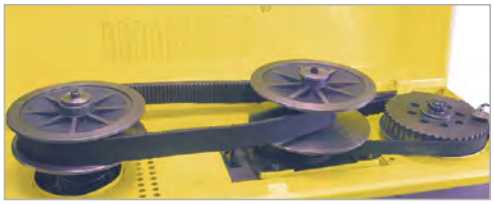

OPTIONAL EQUIPMENT

» available with thread cutting device

Description	SB 55 SV
drilling cap in steel	50 mm
sleeve travel	160 mm
spindle taper	MT 4
spindle speeds	85 - 1.900 min^{-1}
speeds	stepless
automatic drilling feed	0,10-0,20-0,30 mm/rev
working range	320 mm
table size	500 x 425 mm
T-slot size (table)	14 mm
T-slot number (table)	2 (diagonal)
drilling table swivel	±45°
column diameter	110 mm
distance spindle to table max.	590 mm
distance spindle to foot max.	1.140 mm
motor power	400 V / 1,0 kW / 1,7 kW
dimensions (W x D x H)	515 x 965 x 1.920 mm
weight	450 kg

	SB 55 SV
EAN	**4260364290158**
Item No.	**210 2055**

SB 55 SV

» Column Drilling Machine in solid construction suitable for craftsmen and industrial use
» stability and smoothness by massive assemblies
» powerful, smooth running 2-step electric motor with cooling fins
» switch for clockwise/anticlockwise rotation
» complete speed range is obtained without belt change
» variable speed adjustment by PIV-drive: built in high quality steel with belt technology
» digital LED speed display
» auto spindle feed with 3 speeds
» integrated cone ejection, hardened for high longevity
» working table with precisely finished surface; rotating, tilting and inclinable; massive construction with T-slots for 14 mm sliding blocks
» rack on ball-bearing for easy table rotation around the column
» integrated cooling pump and coolant tank
» LED working light
» RÖHM quick-action drill chuck supplied as standard 3-16 mm
» drill chuck guard
» drill depth stop
» LED working light

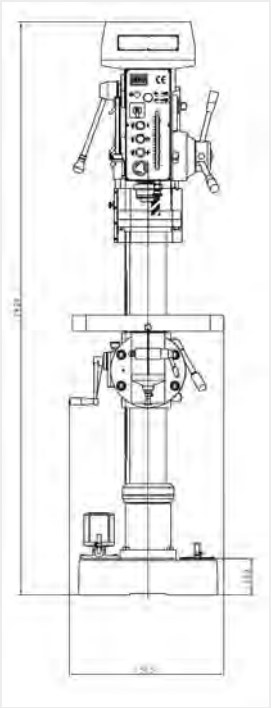

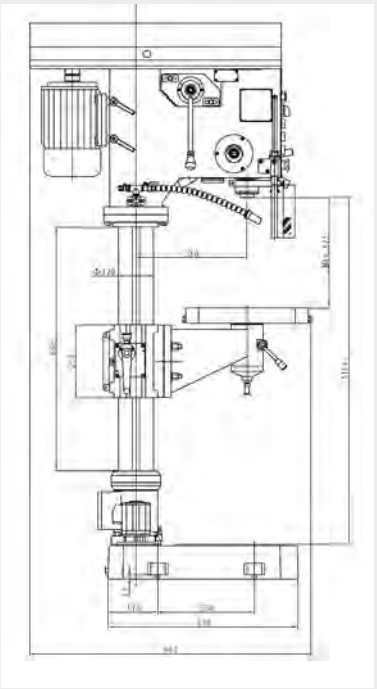

Optional Equipment

	Description	Art.-No.			Description	Art.-No.	
	Quick Action Drill Chuck RÖHM 1-13 mm	510 3013			MS 125	120 0125	
	Quick Action Drill Chuck RÖHM 3-16 mm	510 3016			UPS 100	520 4010	
	HSS Drill Bit Set	510 9013			Morse Taper Drill Case 1	510 1423	
	MSE 75	121 0075			Morse Taper Drill Case 2	510 1430	
	MSE 100	121 0100			Morse Taper	-	
	MSE 125	121 0125			Reducing Sleeves	-	
	MSE 150	121 0150			Extension Sleeves	-	
	MSI 100	121 2100					
	MSI 140	121 2140					
	MSI 200	121 2200					
	MS 100	120 0100					

You can find detailed equipment at page 259.

H-SB 60 FV HIGHLINE

COLUMN DRILLING MACHINE

HIGHLINE

INDUSTRIAL MACHINE FOR HIGH CLAIMS AT THE BEST PRICE

Extremely robust machine in raised quality with extensive technical equipment.

» stability and smoothness by massive assemblies
» high quality 2-step aluminum motor with cooling fins and frequency converter
» stepless speed control using frequency converters and potentiometers
» spindle speeds from 40 - 4.000 U/min
» high torque
» digital LED speed display
» hardened and ground main spindle made of heavy duty steel EN 353
» incorporated hardened cone ejection for long lifespan
» switch for clockwise/anticlockwise rotation
» pre-selection for drilling, thread cutting and series production
» threading mechanism for threads up to M 48
» adjustable drilling depth stop with millimeter scale, readable from the front, as well as digital LED drilling depth display (only model H-SB 60 NC: input and reading in the touchscreen)
» auto spindle sleeve feed with 4 speeds and overload protection
» feed circuit with electromagnetic clutch, operation on electric cross handle circuit
» hardened and ground toothed gear wheels
» feed worm gear of phosphor bronze for highest loads and durability
» massive, manually trimmed and solid work table with T-slots for 14 mm sliding blocks; tilting and rotating with circular cooling liquid channel
» comfortable mechanical and electrical height adjustment of the drilling table with toothed rack
» toothed rack on ball bearings for easy table rotation around the column even when highly loaded
» massive, hand scraped base with circumferential cooling liquid channel
» powerful cooling liquid facility
» height adjustable chuck guard with protective glass and auto shutdown by micro switch
» RÖHM quick - action drill chuck as standard 3-16 mm

Description	H-SB 60 FV HIGHLINE
threading capacity	M 48
drilling cap in steel	60 mm
sleeve travel	200 mm
spindle taper	MT 4
running concentricity	< 0,015 mm
lower spindle speeds higher spindle speeds	motor step 1: 0 - 350 min^{-1} motor step 2: 0 - 2.000 min^{-1} motor step 1: 0 - 700 min^{-1} motor step 2: 0 - 3.500 min^{-1}
automatic drilling feed	0,07; 0,15; 0,25 und 0,40 mm/rev
working range	350 mm
table size	500 x 400 mm
T-slot size (table)	14 mm
T-slot number (table)	2 (diagonal)
column diameter	175 mm
column wall thickness	17 mm
distance spindle to table max.	600 mm - height electr. adjustable
distance spindle to foot max.	1.170 mm
coolant tank	6 ltr
motor power	400 V / 4,0 kW
dimensions (W x D x H)	750 x 1.100 x 2.020 mm
weight	780 kg

	H-SB 60 FV HIGHLINE
EAN	**4260364290172**
Item No.	**110 2060**

ENGINEERED AND DESIGNED BY EPPLE MASCHINEN®

HIGHLINE

mode selection:
DRILLING, THREADING,
SERIALPRODUCTION

ejection device for tool change

digital speed display

forward and reverse

LED working light on-off switch

cooling liquid switch on-off

emergency-stop

switch for 2-step driving motor

activation keys for threading mechanism or sleeve feed in the star handle (H- SB 50 V and H- SB 60 FV)

switch for electrical table height adjustment

LED light integrated in the machine head

height adjustable chuck guard with electrical switch

powerful motor for a comfortable table height adjustment

toothed rack with ball bearings for easy table rotation under heavy loads

drilling table
» manually trimmed and precisely finished
» electrical height adjustment by powerful motor
» large dimensioned and massive construction
» strong ribbed rear side
» rotating by 360° around the table axis and around the column
» double table deadlock with safety switch (rear side)

machine foot
» manually trimmed and precisely finished
» column support and base plate composed of one cast part for highest precision and stability

ENGINEERED AND DESIGNED BY EPPLE MASCHINEN®

Produktvideo-QR oder
www.epple.com

H-SB 60 NC HIGHLINE

COLUMN DRILLING MACHINE

HIGHLINE

» threading mechanism for threads up to M 48
» input and reading of the sleeve way in the touch screen
» auto spindle sleeve feed with 4 speeds and overload protection
» hardened and ground toothed gear wheels
» feed worm gear of phosphor bronze for highest loads and durability
» massive, manually trimmed and solid work table with T-slots for 14 mm sliding blocks; tilting and rotating with circular cooling liquid channel
» comfortable mechanical and electrical height adjustment of the drilling table with toothed rack
» toothed rack on ball bearings for easy table rotation around the column even when highly loaded
» massive, hand scraped base with circumferential cooling liquid channel
» powerful cooling liquid facility
» height adjustable chuck guard with protective glass and auto shutdown by micro switch
» RÖHM quick - action drill chuck as standard 3-16 mm

Description	H-SB 60 NC HIGHLINE
threading capacity	M 48
drilling cap in steel	60 mm
sleeve travel	200 mm
spindle taper	MT 4
running concenttricity	< 0,015 mm
lower spindle speeds higher spindle speeds	motor step 1: 0 - 350 min^{-1} motor step 2: 0 - 2.000 min^{-1} motor step 1: 0 - 700 min^{-1} motor step 2: 0 - 3.500 min^{-1}
automatic drilling feed	0,07; 0,15; 0,25 und 0,40 mm/rev
working range	350 mm
table size	500 x 400 mm
T-Slot size (table)	14 mm
T-Slot number (table)	2 (diagonal)
column diameter	175 mm
column wall thickness	17 mm
distance spindle to table	600 mm - height electr. adjustable
distance spindle to foot	1.170 mm
coolant tank	6 ltr
motor power	400 V / 4,0 kW
dimensions (W x D x H)	750 x 1.100 x 2.020 mm
weight	780 kg

	H-SB 60 NC HIGHLINE
EAN	**4260364290189**
Item No.	**110 4060**

INDUSTRIAL MACHINE FOR HIGH CLAIMS AT THE BEST PRICE

Extremely robust machine in raised quality with extensive technical equipment, developed for the demanding user with touch screen operation.

» stability and smoothness by massive assemblies
» high quality 2-step aluminum motor with cooling fins and frequency converter
» stepless speed control using frequency converters and potentiometers
» spindle speeds from 40 - 4.000 U/min
» high torque
» digital LED speed display
» hardened and ground main spindle made of heavy duty steel EN 353
» incorporated hardened cone ejection for long lifespan
» switch for clockwise/anticlockwise rotation
» pre-selection for drilling, thread cutting and series production

ENGINEERED AND DESIGNED BY EPPLE MASCHINEN®

EXKLUSIVE OF EPPLE MASCHINEN®

HIGHLINE

mode selection:
DRILLING, THREADING,
SERIALPRODUCTION

ejection device for tool change

digital speed display

potentiometer for a stepless speed regulation forward and reverse

cooling liquid switch on-off

emergency-stop

Touch-Screen-Display

switch for 2-step driving motor

activation keys for threading mechanism or sleeve feed in the star handle

switch for electrical table height adjustment

LED light integrated in the machine head

height adjustable chuck guard with electrical switch

powerful motor for a comfortable table height adjustment

toothed rack with ball bearings for easy table rotation under heavy loads

drilling table
» manually trimmed and precisely finished
» electrical height adjustment by powerful motor
» large dimensioned and massive construction
» strong ribbed rear side
» rotating by 360° around the table axis and around the column
» double table deadlock with safety switch (rear side)

machine foot
» manually trimmed and precisely finished
» column support and base plate composed of one cast part for highest precision and stability

ENGINEERED AND DESIGNED BY EPPLE MASCHINEN®

GB 32 / GB 33

GEARED HEAD DRILLING MACHINES

PIC.: GB 32
automatical mechanical feed

PIC.: GB 33
electrical feed

PIC.: Feed Circuit
(GB 32)

Description	GB 32	GB 33
drilling cap in steel	35 mm	35 mm
sleeve travel	180 mm	180 mm
spindle taper	MT 4	MT 4
spindle speeds	50 - 1.450 min^{-1}	50 - 1.450 min^{-1}
no. of speeds	18	18
automatic drilling feed	0,10 und 0,20 mm/rev	0,10 und 0,20 mm/rev
working range	350 mm	350 mm
table size	550 x 550 mm	550 x 550 mm
T-slot size (table)	16 mm	16 mm
T-slot number (table)	2 (diagonal)	2 (diagonal)
column diameter	150 mm	150 mm
distance spindle to table max.	700 mm	700 mm
distance spindle to foot max.	1.200 mm	1.200 mm
motor power	400 V / 0,85 kW / 1,5 kW	400 V / 0,85 kW / 1,5 kW
total height	2.250 mm	2.250 mm
dimensions (W x D x H)	650 x 900 x 2.250 mm	650 x 900 x 2.250 mm
weight	450 kg	470 kg
	GB 32	**GB 33**
EAN	**4260364290196**	**4260364290202**
Item No.	**215 1132**	**215 1133**

GB 32 / GB 33

» heavy construction
» lockable main switch and motor protection switch
» 18 speeds shiftable by gear levers and 2-step driving motor
» mechanical spindle feed with 2 speeds
» automatic gear wheel lubrication
» spindle locking with integrated drill ejection for easy tool change
» height adjustable safety screen with micro switch providing best protection
» high concentricity precision due to hardened and ground main spindle
» large dimensioned, thick walled cast column for smooth running
» large working range
» massive tilting, rotating and inclinable work table (GB 33) with T-slots for 16 mm sliding blocks, precise surface finishing
» large and massive base plate with T-slots, precise surface finishing
» integrated coolant system and coolant tank
» adjustable drill depth stop with millimeter scale on the front panel
» LED working light
» RÖHM quick-action drill chuck supplied as standard 3-16 mm

Optional Equipment

	Description	Art.-No.			Description	Art.-No.
	Quick Action Drill Chuck RÖHM 1-13 mm	510 3013			MS 125	120 0125	
	Quick Action Drill Chuck RÖHM 3-16 mm	510 3016			UPS 100	520 4010	
	HSS Drill Bit Set	510 9013			Morse Taper Drill Case 1	510 1423	
	MSE 75	121 0075			Morse Taper Drill Case 2	510 1430	
	MSE 100	121 0100			Morse Taper	-	
	MSE 125	121 0125			Reducing Sleeves	-	
	MSE 150	121 0150			Extension Sleeves	-	
	MSI 100	121 2100					
	MSI 140	121 2140					
	MSI 200	121 2200					
	MS 100	120 0100					

You can find detailed equipment at page 259.

GB 50 V

GEARED HEAD DRILLING MACHINE

NEW

Description	GB 50 V
drilling cap in steel	50 mm
sleeve travel	240 mm
spindle taper	MT 4
spindle speeds	40 - 2.100 min^{-1}
no. of speeds	12
automatic drilling feed	0,10 - 0,40 mm/rev
working range	370 mm
table size	600 x 500 mm
T-slot size (table)	14 mm
T-slot number (table)	2 (diagonal)
column diameter	200 mm
distance spindle to table max.	100 - 560 mm
distance spindle to foot max.	1.180 mm
motor power	400 V / 2,2 kW / 2,8 kW
total height	2.350 mm
dimension (W x D x H)	680 x 950 x 2.400 mm
weight	890 kg

	GB 50 V
EAN	**4260364290219**
Item No.	**215 1250**

GB 50 V

» heavy construction
» lockable main switch and motor protection switch
» 12 speeds shiftable by gear levers
» **threading attachment**
» automatic gear wheel lubrication
» spindle locking with integrated drill ejection for easy tool change
» **automatic feed via electromagnetic coupling with 4 feed speeds**
» height adjustable safety screen with micro switch providing best protection
» high concentricity precision due to hardened and ground main spindle
» large dimensioned, thick walled cast column for smooth running
» large working range
» massive tilting, rotating and inclinable work table with T-slots for 16 mm sliding blocks, precise surface finishing
» large and massive base plate with T-slots, precise surface finishing
» integrated coolant system and coolant tank
» adjustable drill depth stop with millimeter scale on the front panel
» LED working light
» RÖHM quick-action drill chuck supplied as standard 3-16 mm

Optional Equipment

	Description	Art.-No.			Description	Art.-No.	
	Quick Action Drill Chuck RÖHM 1-13 mm	510 3013			MS 125	120 0125	
	Quick Action Drill Chuck RÖHM 3-16 mm	510 3016			UPS 100	520 4010	
	HSS Drill Bit Set	510 9013			Morse Taper Drill Case 1	510 1423	
	MSE 75	121 0075			Morse Taper Drill Case 2	510 1430	
	MSE 100	121 0100			Morse Taper	-	
	MSE 125	121 0125			Reducing Sleeves	-	
	MSE 150	121 0150			Extension Sleeves	-	
	MSI 100	121 2100					
	MSI 140	121 2140					
	MSI 200	121 2200					
	MS 100	120 0100					

You can find detailed equipment at page 259.

RB 40

RADIAL DRILLING MACHINE

NEW

Description	RB 40
drilling cap in steel	40 mm
sleeve travel	280 mm
spindle taper	MT 4
spindle speeds	32 - 2.500 min^{-1}
speeds	16
automatic drilling feed	0,10 - 1,25 mm/rev
working range	300 - 1.300 mm
table size	600 x 450 x 450 mm
T-slot size (table)	18 mm
T-slot number (table)	5
column diameter	22 mm
distance spindle to table max.	3
distance spindle to foot max.	280 mm
motor power	300 - 1.120 mm
total height	400 V / 2,2 kW / 3 kW
dimension (W x D x H)	2.150 x 1.070 x 2.170 mm
weight	2.500 kg

	RB 40
EAN	**4260364298192**
Item No.	**215 0040**

RB 40

Very stable radial drilling machine with powerful drive, ergonomically designed for easy operation.

» grounded and strong column
» heavily ribbed boom
» dice table machined on both sides with t-slots
» control panel with function keys
» LED-working light

Other sizes of the machine on request, our sales engineers will be happy to advise you.

Radial Drilling Machine

Milling Machines

BFM 16 VARIO / BFM 20 VARIO
BFM 20 L VARIO

DRILLING-MILLING MACHINES

PIC.: BFM 16 VARIO

PIC.: BFM 20 VARIO

PIC.: BFM 20 VARIO WITH OPTIONAL STAND

Description	BFM 16 Vario	BFM 20 Vario	BFM 20 L Vario
drilling cap in steel	max. 16 mm	max. 16 mm	max. 16 mm
milling cap cutter head	max. 52 mm	max. 63 mm	max. 63 mm
milling cap end mill cutter	max. 16 mm	max. 20 mm	max. 20 mm
working range	175 mm	185 mm	185 mm
head rotation	±90°	±90°	±90°
spindle taper	MT 2	MT 2	MT 2
motor	variable speed	variable speed	variable speed
spindle speeds	50 - 2.500 min^{-1}	50 - 2.250 min^{-1}	50 - 2.250 min^{-1}
sleeve travel	50 mm	50 mm	50 mm
table size	400 x 140 mm	500 x 180 mm	700 x 180 mm
right / left rotation	no	no	no
X-axis travel	220 mm	280 mm	480 mm
Y-axis travel	160 mm	175 mm	175 mm
Z-axis travel	210 mm	280 mm	280 mm
T-slot size (table)	10 mm	12 mm	12 mm
T-slot number (table)	3	3	2
motor power	230 V / 50 Hz / 600 Watt	230 V / 50 Hz / 750 Watt	230 V / 50 Hz / 750 Watt
dimensions (L x D x H)	550 x 530 x 760 mm	670 x 550 x 860 mm	770 x 550 x 860 mm
weight	68 kg	103 kg	115 kg
	BFM 16 Vario	**BFM 20 Vario**	**BFM 20 L Vario**
EAN	**4260364290226**	**4260364290233**	**4260364290240**
Item No.	**235 1116**	**235 1120**	**235 1125**

BFM 35 VARIO

DRILLING-MILLING MACHINES

PIC.: BFM 35 VARIO
WITH OPTIONAL STAND

BFM - Modelle

» spindle feed via cross lever for drilling
» fine adjustable crossfeed for milling
» stepless electronically controlled drive
» wide speed range
» digital LED speed display
» easy operating safety switch with low-voltage release and emergency stop
» mechanical sleeve entry for drilling
» hollow spindle with M 10 drawbar for tool holder (M12 for BFM 35 Vario)
» massive and precisely finished cross table, large dimensioned
» travel is readable on scales
» adjustable wedges
» versatile use of the machine
» drilling/milling head rotating by ±90°
» mechanical adjustable limit stops
» solid dovetail slideway, providing highest stability and upmost precision
» guiding protection by bellows (except model BFM 16 Vario)
» right / left rotation (only model BFM 35 Vario)

OPTIONAL EQUIPMENT

» Stand
» HSS-end mill cutter kit
» coolant system
» collet chuck: MT 2 / MT 3
» clamp kit: SPW 10 (BFM 20, BFM 20 L)
SPW 12 (BFM 35, BFM 45)
» milling vices
» hand wheels with digital display

Description	BFM 35 Vario
drilling cap in steel	max. 32 mm
milling cap cutter head	max. 80 mm
milling cap end mill cutter	max. 20 mm
working range	220 mm
head rotation	±90°
spindle taper	MT 3
motor	variable speed
spindle speeds	50 - 2.250 min^{-1}
sleeve travel	75 mm
table size	700 x 210 mm
X-axis travel	425 mm
Y-axis travel	220 mm
Z-axis travel	370 mm
T-slot size (table)	14 mm
T-slot number (table)	2
motor power	230 V / 1,1 kW
dimensions (L x D x H)	1.120 x 1.100 x 1.100 mm
weight	260 kg

	Description	Art.-No.	
	Quick Action Drill Chuck RÖHM 1-13 mm	**510 3013**	
	Quick Action Drill Chuck RÖHM 3-16 mm	**510 3016**	
	HSS Drill Bit Set	**510 9013**	
	MSE 75	**121 0075**	
	MSE 100	**121 0100**	
	MSE 125	**121 0125**	
	MSE 150	**121 0150**	

	BFM 35 Vario
EAN	**4260364290257**
Item No.	**235 1135**

	BFM 20 Vario / BFM 20 L Vario stand	BFM 35 Vario stand
EAN	**4260364293104**	**4260364293111**
Item No.	**535 0020**	**535 0035**

BFM 45 PG / BFM 45 PG VARIO
BFM 45 PGV / BFM 45 PGDV DIGI

GEARED DRILLING-MILLING MACHINES

PIC.: BFM 45 PG VARIO

PIC.: BFM 45 PG OPTIONAL WITH STAND

PIC.: BFM 45 PGDV DIGI

Description	BFM 45 PG	BFM 45 PG Vario	BFM 45 PGV	BFM 45 PGDV DIGI
drilling cap in cast iron	50 mm	50 mm	50 mm	45 mm
drilling cap in steel	45 mm	45 mm	45 mm	32 mm
milling cap cutter head	max. 100 mm	max. 100 mm	max. 100 mm	max. 80 mm
end mill cap	max. 32 mm	max. 32 mm	max. 32 mm	max. 32 mm
threading in steel max.	M 12	M 12	M 12	M 12
working range	265 mm	265 mm	265 mm	265 mm
distance spindle to table max.	460 mm	460 mm	460 mm	460 mm
head movement	±90°	±90°	±90°	±90°
spindle taper	MT 4	MT 4	MT 4	MT 4
motor	2-steps	1-step	2-steps	2-steps
no. of speeds	12	stepless	12	12
mechanic automatic drilling feed	no	no	yes	yes
spindle speeds	95 - 3.200 min^{-1}	75 - 3.200 min^{-1}	95 - 3.200 min^{-1}	75 - 3.200 min^{-1}
sleeve travel	130 mm	130 mm	130 mm	120 mm
height adjustable mill head	410 mm	410 mm	410 mm	410 mm
table size	800 x 240 mm	800 x 240 mm	800 x 240 mm	800 x 240 mm
cross table movement	560 mm x 200 mm	560 x 200 mm	560 x 200 mm	560 x 190 mm
T-slot size (table)	14 mm	14 mm	14 mm	14 mm
T-slot number (table)	4	3	4	3
motor power	400 V / 1,3 kW / 1,8 kW	400 V / 1,5 kW	400 V / 1,3 kW / 1,8 kW	400 V / 0,85 kW / 1,1 kW
dimensions (L x D x H)	1.100 x 850 x 1.430 mm	1.160 x 980 x 1.520 mm	1.100 x 850 x 1.430 mm	1.220 x 930 x 2.110 mm
weight (netto)	330 kg	330 kg	350 kg	650 kg
	BFM 45 PG	**BFM 45 PG Vario**	**BFM 45 PGV**	**BFM 45 PGDV DIGI**
EAN	**4260364290264**	**4260364294293**	**4260364290271**	**426036424316**
Item No.	**235 1145**	**235 1245**	**235 2145**	**235 3245**

BFM 45 - MODELS
UNIVERSAL PRECISE-MILLING / DRILLING MACHINE

» quenched gearwheels immersed running in oil (not at vario machines)
» heavy cast iron construction
» height adjustable through milling head
» fine crossfeed of spindle sleeve when milling
» large speed range
» variable speed control **(BFM 45 PG Vario)**
» 2-step motor
» 12 speeds (BFM 45 PG, BFM 45 PGDV DIGI)
» clockwise/anticlockwise rotation
» easy operating safety switch with low-voltage release and emergency stop
» high accurate spindle running due to taper roller bearings
» mechanical feed of spindle sleeve for drilling via sleeve lever
» thread cutting device
» 3-stage vertical feed model: BFM 45 PGV und PGDV DIGI
» drill depth stop
» adjustable wedges
» gear head rotation 90° to the right, 45° to the left
» electrical head and table feed (BFM 45 PGDV DIGI only)

BFM 45 PG : manual feed
BFM 45 PG Vario : manual feed
BFM 45 PGV : automatic feed

Open control unit with thread cutting device

OPTIONAL EQUIPMENT

» LED working light
» HSS end mill cutter kit
» coolant system
» collet chuck MT 2
» clamp kit SPW 12
» milling vices
» universal stand

	Description	Art.-No.	
	Quick Action Drill Chuck RÖHM 1-13 mm	510 3013	
	Quick Action Drill Chuck RÖHM 3-16 mm	510 3016	
	HSS Drill Bit Set	510 9013	
	MSE 75	121 0075	
	MSE 100	121 0100	
	MSE 125	121 0125	
	MSE 150	121 0150	
	MSI 100	121 2100	
	MSI 140	121 2140	
	MSI 200	121 2200	
	MS 100	120 0100	

	Stand
EAN	4260364293067
Item No.	535 1035

BFM 50 PG

GEARED DRILLING-MILLING MACHINE

OPTIONAL EQUIPMENT

» HSS end mill cutter kit
» collet chuck ISO 40
» clamp kit
» milling vices
» rotary tables

Description	BFM 50 PG
drilling cap in cast iron	50 mm
drilling cap in steel	35 mm
milling cap cutter head	max. 100 mm
end mill cap	max. 32 mm
threading in steel max.	up to M 16
working range	320 mm
distance spindle to table max.	275 mm
head rotation	90°
spindle taper	ISO 40
motor	2-steps
no. of speeds	8 speeds (4 speeds via transmission circuit and 2- speed motor)
spindle speeds rpm	115 / 230 / 290 / 360 / 580 / 720 / 875 / 1.750 min^{-1}
sleeve travel	120 mm
height adjustable mill head	350 mm
table feed speeds	24 / 60 / 65 / 100 / 185 / 285 / 470 / 720 mm/min + additional overdrive
table size	800 x 240 mm
cross table movement	400 x 230 mm
T-slot size (table)	14 mm
T-slot number (table)	4
motor power	400 V / 850 Watt / 1,5 kW
dimensions (L x D x H)	1.175 x 870 x 2.100 mm
weight	560 kg

	BFM 50 PG
EAN	**4260364290288**
Item No.	**235 1150**

BFM 50 PG

UNIVERSAL MILLING / DRILLING MACHINE WITH TABLE FEED, COOLANT SYSTEM, LED WORKING LIGHT AND STAND.

Geared head with solid dovetail slideway.
Dovetail slideway in all 3 axes, hand-scraped, providing highest stability and precision. Solid cast iron construction.

» quenched gearwheels immersed running in oil
» hollow spindle to clamp tools via M 16 drawbar
» fine spindle crossfeed sleeve when milling
» large speed range: 4 speeds by gear shaft plus 2 motor speeds
» clockwise/anticlockwise rotation
» easy operating safety switch with low-voltage release and emergency stop
» high accurate spindle running due to taper roller bearings
» mechanical spindle feed for drilling via cross lever
» coupling for changeover of manual coarse feed in hand-fine feed
» drill depth stop
» massive exact cross table, large dimensioned with precise surface finishing with adjustable wedges and rotable by 45° to the left and right
» automatic feed for the X-axis as standard (8 speeds)
» coolant device
» LED working light
» gear head rotation +/-90°

Automatic feed for the X-axis as standard (8 speeds)

Cross Table rotable by 45° to the left and right

	Description	Art.-No.			Description	Art.-No.	
	Quick Action Drill Chuck RÖHM 1-13 mm	510 3013			MS 125	120 0125	
	Quick Action Drill Chuck RÖHM 3-16 mm	510 3016			UPS 100	520 4010	
	HSS Drill Bit Set	510 9013			Morse Taper Drill Case 1	510 1423	
	MSE 75	121 0075			Morse Taper Drill Case 2	510 1430	
	MSE 100	121 0100			Morse Taper	535 0028	
	MSE 125	121 0125			Reducing Sleeves	-	
	MSE 150	121 0150			Extension Sleeves	-	
	MSI 100	121 2100			Auffütterungshülsen		
	MSI 140	121 2140					
	MSI 200	121 2200					
	MS 100	120 0100					

You can find detailed equipment at page 259.

FM 50 S / FM 50 S DIGI

GEARED DRILLING-MILLING MACHINE

Professional Geared Drilling- Milling Machine

PIC.: FM 50 S DIGI

OPTIONAL EQUIPMENT

» HSS end mill cutter kit
» collet chuck ISO 40
» clamp kit SPW 12
» milling vices
» rotary tables

Machine is available on request with longer table and larger longitudinal path.

Description	FM 50 S	FM 50 S DIGI
drilling cap in cast iron	50 mm	50 mm
drilling cap in steel	35 mm	35 mm
milling cap cutter head	max. 100 mm	max. 100 mm
end mill cap	max. 32 mm	max. 32 mm
threading in steel max.	up to M 16	up to M 16
working range	170 bis 690	170 bis 690
distance spindle to table max.	340 mm	340 mm
spindle head rotation	90°	90°
spindle taper	ISO 40	ISO 40
motor	2-steps	2-steps
no. of speeds	8 speeds (4 speeds via transmission circuit and 2-speed motor)	8 speeds (4 speeds via transmission circuit and 2-speed motor)
spindle speeds rpm	115 / 230 / 290 / 360 / 580 / 720 / 875 / 1.750 min^{-1}	115 / 230 / 290 / 360 / 580 / 720 / 875 / 1.750 min^{-1}
sleeve travel	120 mm	120 mm
height adjustment cross table	350 mm	350 mm
table feed speeds	8 + overdrive	8 + overdrive
longitudinal table feed	24 / 40 / 65 / 100 185 / 285 / 470 / 720 mm/min + additional overdrive	24 / 40 / 65 / 100 185 / 285 / 470 / 720 mm/min + additional overdrive
table size	800 x 240 mm	800 x 240 mm
cross table movement	lengthwise (X): 360 mm, crosswise (Y): 200 mm, vertical (Z): 345 mm	lengthwise (X): 360 mm, crosswise (Y): 200 mm, vertical (Z): 340 mm
T-slot size (table)	14 mm	14 mm
T-slot number (table)	5	5
motor power	400 V / 850 Watt / 1,5 kW	400 V / 850 Watt / 1,5 kW
dimensions (L x D x H)	1.200 x 1.120 x 2060 mm	1.200 x 1.120 x 2060 mm
weight	770 kg	780 kg

	FM 50 S	FM 50 S DIGI
EAN	**4260364290295**	**4260364290301**
Item No.	**235 2350**	**235 3350**

FM 50 S / FM 50 S DIGI

PROFESSIONAL MILLING AND DRILLING MACHINE WITH TABLE FEED, COOLANT SYSTEM AND LED WORKING LIGHT.

Heavy cast iron construction. Geared head with solid dovetail slideway, dovetail slideway in all 3 axes, hand-scraped, providing highest stability and precision. A total od dovetail guides. Universal precision drilling and milling machines - solid cast design.

» quenched gearwheels immersed running in oil
» hollow spindle for tool clamping via M 16 drawbar
» fine spindle crossfeed sleeve when milling
» large speed range: 4 speeds by gear shaft plus 2 motor speeds
» high accurate spindle running due to taper roller bearings
» mechanical spindle feed for drilling via cross lever
» drive coupling for shifting between rough and fine feed
» drill depth stop
» easy operating safety switch with low-voltage release and emergency stop
» massive exact cross table, large dimensioned with precise surface finishing
» cross table 45° to left and the right pivotable
» forward and reverse for threading
» automatic feed for the X-axis as standard (8 speeds)
» cooling liquid facility
» LED working light
» gear head rotation +/-90°
» FM 50 S DIGI: digital readout (LED) position + travel measurement

cross table rotatable 45° to the left and 45° to the right.

DIGI model with easy to operate LED display for precise position readout and measurement of travel distances. DIGI-Machines exclusive.

You can find detailed equipment at page 259.

	Description	Art.-No.			Description	Art.-No.	
	Shank Cutter Catridge	**535 1020**			**Precision parallels**	**535 0028**	
	Milling vice FMS	**-**			**Mounting Set**	**-**	
	Milling vice FMSN	**-**			**Clamping Tool Set**	**-**	
	Milling vice FS 16-200	**520 3070**			**Morse Taper**	**-**	
	Morse Taper Drill Case 1	**510 1423**			**Reducing Sleeves**	**-**	
	Morse Taper Drill Case 2	**510 1430**			**Extensions Sleeves**	**-**	

UFM 80 DIGI

UNIVERSAL DRILLING-MILLING MACHINE

OPTIONAL EQUIPMENT

» HSS end mill cutter kit
» collet chuck ISO 40
» clamp kit SPW 12
» milling vices
» rotary tables

Description	UFM 80 DIGI
drilling cap in cast iron	50 mm
drilling cap in steel	35 mm
milling cap cutter head	max. 100 mm
end mill cap	max. 32 mm
threading in steel max.	up to M 16
working range	170 - 690 mm
distance spindle to table max.	360 mm
head movement	90°
spindle taper	ISO 40
motor	2-steps
no. of speeds	8 speeds
spindle speeds	115 / 230 / 290 / 360 / 580 / 720 / 875 / 1.750 min^{-1}
cross table feed	60 - 1.350 min^{-1}
sleeve travel	120 mm
height adjustment cross table	350 mm
table feed speeds X-axis	mechanical feed 8 + overdrive
table feed speeds Y-axis	electrical feed - variable speed + overdrive
longitudinal table feed	24 / 40 / 65 / 100 / 185 / 285 / 470 / 720 mm/min. + additional overdrive
table size	800 x 240 mm
cross table movement	lengthwise (X): 365 mm, crosswise (Y): 185 mm vertical (Z): 360 mm
T-slot size (table)	14 mm
T-slot number (table)	5
motor power	400 V / 850 Watt / 1,5 kW
dimensions (L x D x H)	1.200 x 1.120 x 2.060 mm
weight	970 kg

	UFM 80 DIGI
EAN	**4260364290318**
Item No.	**235 3380**

Machine is available on request with longer table and larger longitudinal path.

UFM 80 DIGI
INDUSTRIAL MACHINE FOR SINGLE AND SMALL BATCH PRODUCTION

Professional drilling and milling machine with horizontal and vertical spindle, longitudinal (X) and cross (Y) table feed, 3-axes digital readout system, coolant system and halogen working light. Geared head with solid dovetail slideway. Dovetail slideway in all 3 axes, hand-scraped, providing highest stability and precision.

» quenched gearwheels immersed running in oil
» hollow spindle for tool clamping by M 16 drawbar
» fine spindle crossfeed sleeve when milling
» large speed range: 4 speeds by gear shaft plus 2 motor speeds
» mechanical spindle feed for drilling via cross lever
» drive coupling for shifting between rough and fine feed
» easy operating safety switch with low-voltage release and emergency stop
» massive exact cross table, large dimensioned with precise surface finishing with adjustable wedges
» cross table 45° to left and the right pivotable
» standard table feeds: X-axis with 8 speeds, Y-axis stepless adjustable + rapid speed
» cooling liquid facility
» LED working light
» gear head rotation +/-90°

DIGI model with easy to operate LED display for precise position readout and measurement of travel distances. DIGI-Machines exclusive.

Y-axis with stepless feed control

cross table rotation 45° to the left and right

You can find detailed equipment at page 259.

	Description	Art.-No.			Description	Art.-No.	
	Shank Cutter Catridge	**535 1020**			**Precision parallels**	**535 0028**	
	Milling vice FMS	**-**			**Mounting Set**	**-**	
	Milling vice FMSN	**-**			**Clamping Tool Set**	**-**	
	Milling vice FS 16-200	**520 3070**			**Morse Taper**	**-**	
	Morse Taper Drill Case 1	**510 1423**			**Reducing Sleeves**	**-**	
	Morse Taper Drill Case 2	**510 1430**			**Extensions Sleeves**	**-**	

WFM 80 DIGI

TOOL MILLING MACHINE

PIC.: WFM 80 DIGI

WFM 80 DIGI
TOOL MILLING MACHINE

Professional milling machine with vertical and horizontal spindle, table feed in X- and y-axis, as well as 3-axis digital device, coolant device and LED working light.
Solid dovetail guide on the cross arm otherwise rectangular guides.

» vertical milling head with spindle taper ISO 40 / DIN 2080, 60 mm quill stroke 90° rotable on both sides.
» hardened and grounded worktable 800 x 400 mm with T-slots 14 mm; Table load max 300 kg.
» worktable, vertical milling head and boom are made of stress-free annealed quality cast iron, some with multiple ribs for better stability
» mechanical safety handwheels with scale ring in all axes
» ball screw in all 3 axes
» automatic central lubrication

OPTIONAL EQUIPMENT
» swivel table
» table covering

Description	WFM 80 DIGI
table size	800 x 400 mm
travel	lengthwise (X): 500 mm crosswise (Y): 400 mm vertical (Z): 400 mm
table load	max. 300 kg
max. distance spindle- table	405 mm
spindle head swivel range	90°
spindle taper	ISO 40
no. of speeds	18 speeds
speeds of vertical spindle	40 - 2.000 min^{-1}
speeds of horizontal spindle	40 - 2.000 min^{-1}
sleeve stroke	60 mm
table height adjustment	400 mm
feed speed X-axis	(18) 10 - 1.000 mm/min
feed speed Y-axis	(18) 10 - 1.000 mm/min
feed speed Z-axis	(18) 10 - 1.000 mm/min
rapid traverse (X / Y / Z)	1.200 mm/min
t-slot size (table)	14 mm
t-slot number (table)	8
motor power	400 V / 50 Hz / 3,7 kW
dimensions (L x W x H)	1.650 x 1.770 x 1.880 mm
weight	1.550 kg
	WFM 80 DIGI
EAN	**4260364295702**
Item No.	**245 3480**

You can find detailed equipment at page 259.

DF 2 DIGI / DF 4 DIGI

TOOL MILLING MACHINE

NEW

PIC.: DF 4 DIGI

DF 2 DIGI / DF 4 DIGI
TOOL MILLING MACHINE

High quality and stable universal milling & drilling machine, with high precision, durability and maximum operating comfort.

» vertical milling head with spindle taper ISO 40 / DIN 2080, 60 mm quill stroke 90° tiltable on both sides
» hardened and grounded worktable with T-slots 14 mm.
» mechanical safety handwheels with scale ring in all axes.
» ball screw in all 3 axes.
» automatic central lubrication.

STANDARD EQUIPMENT

» 3-axis-digital readout system
» cooling device
» LED working light

OPTIONAL EQUIPMENT

» swivel table
» table covering
» speeds 48 - 3.800 min^{-1} (just model **DF 4 Digi**)

Description	DF 2 DIGI	DF 4 DIGI
table size	750 x 320 mm	900 x 500 mm
travel	lengthwise (X): 400 mm crosswise (Y): 200 mm vertical (Z): 360 mm	lengthwise (X): 600 mm crosswise (Y): 480 mm vertical (Z): 360 mm
table load	max. 285 kg	max. 360 kg
max. distance spindle - table	450 mm	460 mm
spindle head swivel range	90°	90°
spindle taper	ISO 40	ISO 40
no. of speeds	12 speeds	18 speeds
speeds of vertical spindle	50 - 2.000 min^{-1}	40 - 2.000 min^{-1}
speeds of horizontal spindle	50 - 2.000 min^{-1}	40 - 2.000 min^{-1}
sleeve stroke	120 mm	120 mm
table height adjustment	360 mm	360 mm
feed speed X-axis	(18) 10 - 650 mm/min	(18) 10 - 650 mm/min
feed speed Y-axis	(18) 10 - 650 mm/min	(18) 10 - 650 mm/min
feed speed Z-axis	(18) 10 - 650 mm/min	(18) 10 - 650 mm/min
rapid traverse (X / Y / Z)	1.200 mm/min	1.200 mm/min
t-slot size (table)	14 mm	14 mm
t-slot number (table)	5	7
motor power	400 V / 50 Hz / 2,2 kW	400 V / 50 Hz / 3,7 kW
dimensions (L x W x H)	1.180 x 1.450 x 1.800 mm	1.400 x 1.780 x 1.820 mm
weight	1.350 kg	1.770 kg
	DF 2 DIGI	**DF 4 DIGI**
EAN	**4260364297881**	**4260364297898**
Item No.	**245 3475**	**245 3490**

You can find detailed equipment at page 259.

VFM 95 / VFM 95 DIGI

VERTICAL MILLING MACHINE

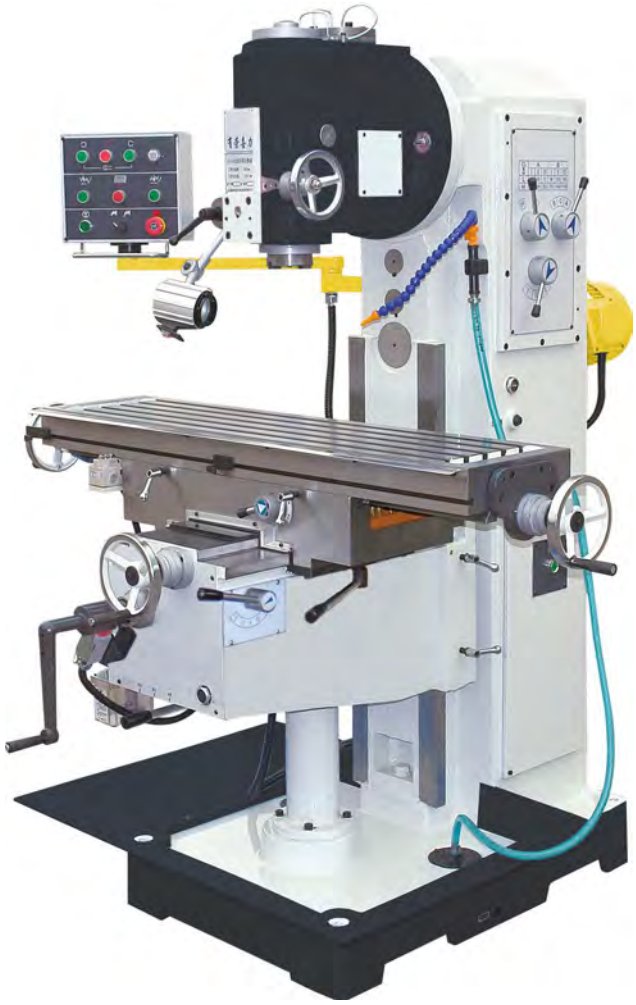

PIC.: VFM 95 WITHOUT DRO

Vertical Milling Machine

VFM 95 / VFM 95 DIGI
VERTICAL MILLING MACHINE

- » powerful vertical milling machine with gearbox
- » gear wheels hardened and grounded
- » machine frame with particularly stable wide guides in all axes
- » +/- 30° swiveling, extremely stable milling head
- » manual spindle sleeve feed with fine adjustment
- » stepless variable feeds and rapid traverse at the table and console, standard with LED working light, coolant device and chip tray
- » digital display with 3-axis (only model VFM 95 DIGI)

Description	VFM 95	VFM 95 DIGI
working range	450 mm	450 mm
spindle taper	ISO 40	ISO 40
spindle speeds	12	12
speeds of vertical spindle	35 - 1.500 U/min	35 - 1.500 U/min
table feed speed	X,Y: 30 - 830 mm/min Z: 23 - 625 mm/min	X,Y: 30 - 830 mm/min Z: 23 - 625 mm/min
table overdrive	1.335/1.335/1.000 mm/min	1.335/1.335/1.000 mm/min
table size	1.270 x 300 mm	1.270 x 300 mm
travel	lengthwise 720 mm crosswise 300 mm vertical 400 mm	lengthwise 720 mm crosswise 280 mm vertical 400 mm
T-slot size (table)	14	14
T-slot number (table)	3	3
dimensions (L x D x H)	1.720 x 1.680 x 1.810 mm	1.720 x 1.680 x 1.810 mm
weight	1.500 kg	1.510 kg

	VFM 95	VFM 95 DIGI
EAN	**4260364295719**	**4260364295726**
Item No.	**235 2495**	**235 3495**

VHFM 95 / VHFM 95 DIGI

VERTICAL MILLING MACHINE

PIC.: VHFM 95 WITHOUT DRO

VHFM 95 / VHFM 95 DIGI
VERTICAL MILLING MACHINE

» vertical milling machine with horizontal spindle and vertical milling head
» gear with hardened and grounded gear wheels
» machine frame with stable guides in all axes
» table and consoles with stepless adjustable feeds and rapid traverse, standard with LED working light, coolant device and chip tray
» digital display with 3-axis (only model VHFM 95 DIGI)

Description	VHFM 95	VHFM 95 DIGI
working range	285 mm	285 mm
spindle taper	ISO 40	ISO 40
spindle speeds	12	12
speeds of vertical spindle	35 - 1.500 U/min	35 - 1.500 U/min
table feed speed	X,Y: 30 - 830 mm/min Z: 23 - 625 mm/min	X,Y: 30 - 830 mm/min Z: 23 - 625 mm/min
table overdrive	1.335/1.335/1.000 mm/min	1.335/1.335/1.000 mm/min
table size	1.270 x 300 mm	1.270 x 300 mm
travel	lengthwise 900 mm crosswise 380 mm vertical 400 mm	lengthwise 900 mm crosswise 360 mm vertical 400 mm
T-slot size (table)	14	14
T-slot number (table)	3	3
dimensions (L x D x H)	1.720 x 1.680 x 1.730 mm	1.720 x 1.680 x 1.730 mm
weight	1.600 kg	1.610 kg

	VHFM 95	VHFM 95 DIGI
EAN	**4260364295733**	**4260364295740**
Item No.	**235 2595**	**235 3595**

UFM 100 DIGI

UNIVERSAL MILLING MACHINE

OPTIONAL EQUIPMENT

» HSS end mill cutter kit
» collet chuck ISO 40
» clamp kit SPW 12
» milling vices
» rotary tables

For technical data check page 51.

UFM 100 DIGI

Professional milling machine with universal horizontal and vertical gear head spindle, longitudinal (X) and cross (Y) table feeds, 3-axes digital readout system, coolant system, LED working light. Solid, heavy cast iron body for vibrationless operations; with accurate, large and precise ground surface cross table. Geared head with solid dovetail slideway. Dovetail slideway in every 3 axes, hand-scraped, providing highest stability and precision. Multifunctional universal milling machine for production factories, toolmakers or work-shops. Precision universal milling machine for professional use at an economical price.

» massive cast iron construction
» milling head pivotable in any angle
» smooth running ground and quenched gearwheels immersed in oil
» toolclamping system with M16 screw
» forward and reverse function, emergency stop
» 11 speeds
» large, precise cross table to use for longer and heavier work pieces
» cross table electrically and mechanically adjustable
» cross table with precise surface finishing with adjustable wedges
» large dimensioned handwheels for fine scale adjustment
» 2 table feeds as standard
» X- and Y-axis with 9 speeds with mechanical feeds
» cooling liquid facility
» LED working light
» central lubrication
» steady fixture for horizontal milling
» DRO for precise positioning and travel measurements
» large chip tray
» universal milling head swiveling 360°

You can find detailed equipment at page 259.

control panel for 11 spindle speeds

X- and Y-axes with 9 table speeds

DIGI model with easy to operate LED display for precise position readout and measurement of travel distances.
DIGI-Machines exclusive.

small figures to the right:
1.) easy to operate control panel with digital readout via swiveling arm
2.) tilting and swiveling milling head with chuck guard
3.) central lubrication
4.) control panel pivoting to the left and the right of the machine

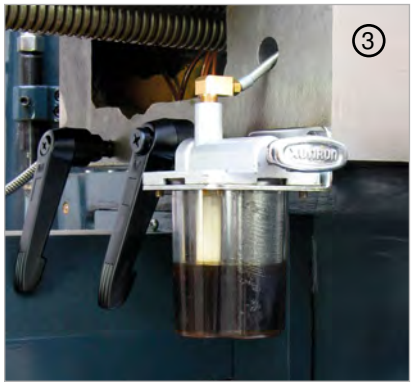

You can find detailed equipment at page 259.

Descriptions	UFM 100 DIGI
horizontal mill cap	125 mm
vertical mill cap	28 mm
face mill cap	85 mm
end mill cap	16 mm
working range	570 mm
distance spindle to table	120 - 460 mm
distance spindle to table max.	0 - 440 mm
swivel of milling head	360°
spindle taper	ISO 40
no. of speeds	11
vertical spindle speeds	40 / 75 / 105 / 180 / 200 / 320 / 370 / 475 / 650 / 820 / 1.600 min^{-1}
horizontal spindle speeds	40 / 75 / 105 / 180 / 200 / 320 / 370 / 475 / 650 / 820 / 1.600 min^{-1}
longitudinal table feed (x)	24 / 42 / 55 / 74 / 98 / 132 / 170 / 230 / 402 mm/min
cross table feed (y)	24 / 42 / 55 / 74 / 98 / 132 / 170 / 230 / 402 mm/min
table size	1.120 x 260 mm
cross table movement	lengthwise (X): 620 mm, crosswise (Y): 250 mm vertical (Z): 440 mm
T-slot size (table)	14
T-slot number (table)	3
motor power	400 V / 2,2 kW **(H: 750 W) (V: 500 W) (P: 100 W)**
dimensions (L x D x H)	1.650 x 1.325 x 1.655 mm
weight	1.660 kg

	UFM 100 DIGI
EAN	**4260364290325**
Item No.	**235 3310**

UFM 200 DIGI

UNIVERSAL MILLING MACHINE

For technical data check page 53.

UFM 200 DIGI

Professional milling machine with universal horizontal and vertical gear head spindle, longitudinal (X) and cross (Y) table feeds, 3-axes digital readout system, coolant system, LED working light. Solid, heavy cast iron body for vibrationless operations; with accurate, large and precise ground surface cross table. Geared head with solid dovetail slideway. Dovetail slideway in every 3 axes, hand-scraped, providing highest stability and precision. Multifunctional universal milling machine for production factories, toolmakers or work-shops. Precision universal milling machine for professional use at an economical price.

» massive cast iron construction
» milling head pivotable in any angle
» smooth running ground and quenched gearwheels immersed in oil
» toolclamping system with M16 screw
» forward and reverse function, emergency stop
» 11 speeds
» large, precise cross table to use for longer and heavier work pieces
» cross table electrically and mechanically adjustable
» cross table with precise surface finishing with adjustable wedges
» large dimensioned handwheels for fine scale adjustment
» 3 table feeds as standard
» X- and Y-axis with 9 speeds with mechanical feeds
» cooling liquid facility
» LED working light
» central lubrication
» steady fixture for horizontal milling
» DRO for precise positioning and travel measurements
» large chip tray
» universal milling head swiveling 360°
» rotatable working table

OPTIONAL EQUIPMENT

» servo drive for all 3 axes

You can find detailed equipment at page 259.

Universal Milling Machine

control panel for 12 spindle speeds

X-, Y- and Z-axes with 8 table speeds

DIGI model with easy to operate LED display for precise position readout and measurement of travel distances.
DIGI-Machines exclusive.

small figures to the right:
1.) easy to operate control panel with digital readout via swiveling arm
2.) tilting and swiveling milling head with chuck guard
3.) central lubrication
4.) control panel pivoting to the left and the right of the machine

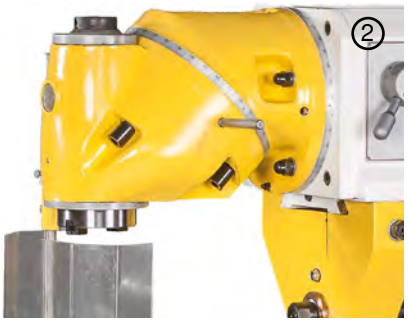

Description	UFM 200 DIGI
horizontal mill cap	130 mm
vertical mill cap	100 mm
face mill cap	20 mm
working range	820 mm
distance spindle to table	560 mm
distance spindle to table max.	0 - 400 mm
swivel of milling head	360°
spindle taper	ISO 50
no. of speeds	12
vertical spindle speeds	60 / 80 / 113 / 154 / 206 / 292 / 358 / 478 / 679 / 925 / 1.230 / 1.750
horizontal spindle speeds	58 / 78 / 108 / 148 / 208 / 288 / 388 / 535 / 720 / 980 / 1.325 / 1.800
longitudinal table feed (X)	22 / 37 / 51 / 80 / 126 / 196 / 272 / 420
cross table feed (Y)	22 / 35 / 48 / 75 / 118 / 182 / 253 / 393
table feed speed (Z)	10 / 15 / 20 / 30 / 50 / 78 / 108 / 168
table size	1.330 x 370 mm
cross table movement	lengthwise (X): 1.000 mm crosswise (Y): 280 mm vertical (Z): 400 mm
T-slot size (table)	14 mm
T-slot number (table)	3
motor power	400 V / 4,0 kW
dimensions (L x D x H)	1.720 x 1.900 x 1.950 mm
weight	2.200 kg

	UFM 200 DIGI
EAN	**4260364290332**
Item No.	**235 3320**

VFM 240 / VFM 240 DIGI

VERTICAL MILLING MACHINE

PIC.: VFM 240
WITHOUT DRO

VFM 240 / VFM 240 DIGI
VERTICAL MILLING MACHINE WITH FIXED BED UNDER THE CROSS TABLE

Very stable bed milling machine for large workpieces and heavy chipping. Generous sized heavy cast frame and pillar with extremely wide flat guides. Stability and lower vibrations lead to more precision with high table load capacity. Hardened and grounded guides in all axis guides guarantee long-term accuracy.

» milling head can be swiveled +/- 90° sideways
» additionally with extendable sleeve, ISO 50 spindle taper
» gear drive with 12 speeds
» handwheels for exact adjustment with fine scaling
» feed in X-, Y- and Z-axis and rapid traverse standard
» coolant device
» LED working light

VFM 240 DIGI with user-friendly digital position measuring system for exact display of the travel including possibilities of the coordinate specification, hole circle pattern calculation, storage for 10 tools and conversion mm / inch.

Description	VFM 240	VFM 240 DIGI
working range	105 mm	105 mm
distance spindle to table max.	600 mm	600 mm
swivel of milling head	±30°	±30°
spindle taper	ISO 50	ISO 50
motor	7,5 kW	7,5 kW
no. of speeds	12	12
vertical spindle speeds	66 - 1.440 U/min	66 - 1.440 U/min
quill stroke	105 mm	105 mm
table speeds	20 - 2.000 mm/min	20 - 2.000 mm/min
table overdrive	3.100 mm/min	3.100 mm/min
table size	2.000 x 400 mm	2.000 x 400 mm
max. table load	max. 2.000 kg	max. 2.000 kg
travel	lengthwise 1.500 mm crosswise 620 mm vertical (milling head) 550 mm	lengthwise 1.500 mm crosswise 620 mm vertical (milling head) 550 mm
T-slot size (table)	18	18
T-slot number (table)	5	5
dimensions (L x D x H)	2.420 x 2.340 x 3.000 mm	2.420 x 2.340 x 3.000 mm
weight	4.500 kg	4.500 kg

	VFM 240	VFM 240 DIGI
EAN	**4260364295757**	**4260364295764**
Item No.	**235 2424**	**235 3424**

VHFM 240 / VHFM 240 DIGI

VERTICAL MILLING MACHINE

PIC.: VHFM 240
WITHOUT DRO

VHFM 240 / VHFM 240 DIGI
VERTICAL MILLING MACHINE WITH FIXED BED UNDER THE CROSS TABLE

Very stable bed milling machine for large workpieces and heavy chipping. Generous sized heavy cast frame and pillar with extremely wide flat guides. Stability and lower vibrations lead to more precision with high table load capacity. Hardened and grounded guides in all axis guides guarantee long-term accuracy.

» milling head with vertical and horizontal spindle
» ISO 50 spindle taper
» gear drive with 12 speeds
» handwheels for exact adjustment with fine scaling
» feed in X-, Y- and Z-axis and rapid traverse standard
» coolant device
» LED working light

VHFM 240 DIGI with user-friendly digital position measuring system for exact display of the travel including possibilities of the coordinate specification, hole circle pattern calculation, storage for 10 tools and conversion mm / inch.

Description	VHFM 240	VHFM 240 DIGI
working range	50 mm	50 mm
distance spindle to table ax.	450 mm	450 mm
swivel of milling head	-	-
spindle taper	ISO 50	ISO 50
motor	7,5 kW	7,5 kW
no. of speeds	18	18
vertical spindle speeds	42 - 1.290 U/min	42 - 1.290 U/min
quill stroke	-	-
table speeds	20 - 2.000 mm/min	20 - 2.000 mm/min
table overdrive	2.500 mm/min	2.500 mm/min
table size	2.000 x 400 mm	2.000 x 400 mm
max. table load	2.000 kg	2.000 kg
travel	lengthwise 1.500 mm crosswise 620 mm vertical (milling head) 680 mm	lengthwise 1.500 mm crosswise 620 mm vertical (milling head) 680 mm
T-slot size (table)	18	18
T-slot number (table)	3	3
dimensions (L x D x H)	2.420 x 2.340 x 3.300 mm	2.420 x 2.340 x 3.300 mm
weight	4.500 kg	4.500 kg

	VHFM 240	VHFM 240 DIGI
EAN	**4260364295771**	**4260364295788**
Item No.	**235 2524**	**235 3524**

HFM 1560 / HFM 2060
HFM 2580 / HFM 3080

BED-TYPE MILLING MACHINES

NEW

PIC.: HFM 3080

HFM 1560 / HFM 2060 / HFM 2580 / HFM 3080
BED-TYPE MILLING MACHINE

Milling machine with mechanical gear, horizontal milling spindle and large work table for machining heavy workpieces. Machine bed, table and column made of high-quality cast iron. Large rectangular guides with telescopic covers.

OPTIONAL EQUIPMENT

» digital readout system
» machine vice
» coolant device
» clamping device

Description	HFM 1560	HFM 2060	HFM 2580	HFM 3080
max distance spindle table	750 mm	750 mm	1.000 mm	1.000 mm
spindle taper	ISO 50	ISO 50	ISO 50	ISO 50
motor	7,5 kW	7,5 kW	7,5 kW	7,5 kW
no. of speeds	6	6	6	6
speeds	82 - 505 U/min	82 - 505 U/min	82 - 505 U/min	82 - 505 U/min
spindle swivelling	±35°	±35°	±35°	±35°
vertical feed	stepless	stepless	stepless	stepless
horizontal milling head travel	350 mm	350 mm	350 mm	350 mm
table speeds	stepless	stepless	stepless	stepless
rapid traverse	1.400 mm/min	1.400 mm/min	1.400 mm/min	1.400 mm/min
table drive	2,2 kW	2,2 kW	2,2 kW	2,2 kW
table size	1.500 x 630 mm	2.000 x 630 mm	2.500 x 800 mm	3.000 x 800 mm
max. table load	1.500 kg	1.500 kg	2.000 kg	2.000 kg
travel	1.500 mm	2.000 mm	2.500 mm	3.000 mm
T-slot size (table)	22 mm	22 mm	22 mm	22 mm
T-slot number (table)	5	5	5	5
dimensions (L x D x H)	4.600 x 2.200 x 2.300 mm	5.300 x 2.200 x 2.300 mm	6.000 x 2.200 x 2.600 mm	6.700 x 2.200 x 2.600 mm
weight	3.200 kg	3.800 kg	5.200 kg	6.600 kg
	HFM 1560	**HFM 2060**	**HFM 2580**	**HFM 3080**
EAN	**4260364298208**	**4260364298215**	**4260364298222**	**4260364298239**
Item No.	**235 1560**	**235 2060**	**235 2580**	**235 3080**

Turning Machines

TU 1803 VARIO / TU 2004 VARIO

STEPLESS LATHE MACHINES

Das Original Epple Maschinen®

PIC.: TU 1803 VARIO WITH OPTIONAL STAND

TU 1803 VARIO / TU 2004 VARIO

» series in a modern design
» stepless speed adjustment and digital speed display
» hardened spindle nose
» true running accuracy < 0,015 mm measured in the spindle nose
» wide bed, inductively hardened
» lead screw cover for a long lifespan
» emergency stop with undervoltage release
» standard with right/left rotation switch
» handwheels with fine scaling

INCLUDED

» 3-jaw chuck 100 mm
» 2 solid tips
» operating tool
» face plate 225 mm
» chip tray
» splashback
» 4-fold steel holder
» change gear set
» lathe chuck protection

Description	TU 1803 Vario	TU 2004 Vario
turning ø over machine bed	Ø 180 mm	Ø 210 mm
turning-Ø over compound sleds	Ø 120 mm	Ø 210 mm
centre width	300 mm	400 mm
centre height	90 mm	105 mm
bed width	100 mm	100 mm
spindle bore	Ø 21 mm	Ø 21 mm
spindle taper	MT 3	MT 3
3-jaw chuck	Ø 100 mm	Ø 100 mm
spindle speed	125 - 2.500 min^{-1}	150 - 2.500 min^{-1}
top slide - travel	75 mm	75 mm
compound slide - travel	85 mm	85 mm
pitch - metric	0,5 - 3,0	0,5 - 3,0
pitch - inch	10 - 44 Gg/inch	10 - 44 Gg/inch
pinole diameter	Ø 25 mm	Ø 25 mm
tailstock sleeve travel	60 mm	60 mm
tailstock taper absorption	MT 2	MT 2
motor power	600 Watt / 50 Hz / 230 V	600 Watt / 50 Hz / 230 V
dimensions (L x D x H)	740 x 390 x 310 mm	840 x 390 x 370 mm
weight	45 kg	50 kg

	TU 1803 Vario	TU 2004 VARIO
EAN	**4260364295795**	**4260364295801**
Item No.	**246 1813**	**246 2014**

TU 2406 / TU 2406 VARIO

STEPLESS LATHE MACHINES

Das Original Epple Maschinen®

PIC.: TU 2406 VARIO WITH OPTIONAL STAND

TU 2406 / TU 2406 VARIO

» series in a modern design
» stepless speed adjustment and digital speed display
» hardened spindle nose
» true running accuracy < 0,015 mm measured in the spindle nose
» wide bed, inductively hardened
» lead screw cover for a long lifespan
» emergency stop with undervoltage release
» standard with right/left rotation switch
» handwheels with fine scaling

INCLUDED

» 3-jaw chuck 125 mm
» 2 solid tips
» operating tool
» face plate 225 mm
» chip tray
» splashback
» 4-fold steel holder
» change gear set
» lathe chuck protection

Description	TU 2406	TU 2406 VARIO
turning-Ø over machine bed	Ø 250 mm	Ø 250 mm
turning-Ø over compound sleds	Ø 150 mm	Ø 150 mm
centre width	550 mm	550 mm
centre height	125 mm	125 mm
bed width	134 mm	134 mm
spindle bore	Ø 26 mm	Ø 26 mm
spindle taper	MT 4	MT 4
3-jaw chuck	Ø 125 mm	Ø 125 mm
spindle speed	125 - 2.000 min^{-1}	30 - 4.000 min^{-1}
top slide - travel	75 mm	75 mm
compound slide - travel	85 mm	85 mm
pitch - metric	0,2 - 3,5	0,2 - 3,5
pitch - inch	8 - 56 Gg/inch	8 - 56 Gg/inch
pinole diameter	Ø 30 mm	Ø 30 mm
tailstock sleeve travel	70 mm	70 mm
tailstock taper absorption	MT 2	MT 2
motor power	550 Watt / 50 Hz / 230 V	850 Watt / 50 Hz / 230 V
dimensions (L x D x H)	1.110 x 500 x 500 mm	1.110 x 500 x 500 mm
weight	140 kg	140 kg

	TU 2406	TU 2406 VARIO
EAN	**4260364295818**	**4260364295825**
Item No.	**246 2406**	**246 2416**

TU 2506 / TU 2506 VARIO

STEPLESS LATHE MACHINES

Das Original Epple Maschinen®

PIC.: TU 2506 VARIO
WITH OPTIONAL STAND

TU 2506 / TU 2506 VARIO

» series in a modern design
» stepless speed adjustment and digital speed display
» hardened spindle nose
» true running accuracy < 0,015 mm measured in the spindle nose
» wide bed, inductively hardened
» lead screw cover for a long lifespan
» emergency stop with undervoltage release
» standard with right/left rotation switch
» handwheels with fine scaling

INCLUDED

» 3-jaw chuck 125 mm
» 2 solid tips
» operating tool
» face plate 225 mm
» chip tray
» splashback
» 4-fold steel holder
» change gear set
» lathe chuck protection

Description	TU 2506	TU 2506 VARIO
turning- Ø over machine bed	Ø 250 mm	Ø 250 mm
turning-Ø over compound sleds	Ø 150 mm	Ø 150 mm
centre width	550 mm	550 mm
centre height	125 mm	125 mm
bed width	134 mm	134 mm
spindle bore	Ø 26 mm	Ø 26 mm
spindle taper	MT 4	MT 4
3-jaw chuck	Ø 125 mm	Ø 125 mm
spindle speed	125 - 2.000 min^{-1}	30 - 4.000 min^{-1}
top slide - travel	75 mm	75 mm
compound slide - travel	85 mm	85 mm
pitch - metric	0,2 - 3,5	0,2 - 3,5
pitch - inch	8 - 56 Gg/inch	8 - 56 Gg/inch
pinole diameter	Ø 30 mm	Ø 30 mm
tailstock sleeve travel	70 mm	70 mm
tailstock taper absorption	MT 2	MT 2
motor power	550 Watt / 50 Hz / 230 V	850 Watt / 50 Hz / 230 V
dimensions (L x D x H)	1.110 x 500 x 500 mm	1.110 x 500 x 500 mm
weight	140 kg	140 kg

	TU 2506	TU 2506 VARIO
EAN	**4260364295832**	**4260364295849**
Item No.	**246 2506**	**246 2516**

TU 2807 / TU 2807 VARIO
TU 3018 / TU 3018 VARIO

STEPLESS LATHE MACHINES

Das Original Epple Maschinen®

PIC.: TU 3018 VARIO
WITH OPTIONAL STAND

TU 2807 / TU 2807 VARIO
TU 3018 / TU 3018 VARIO

» series in a modern design
» stepless speed adjustment and digital speed display
» hardened spindle nose
» true running accuracy < 0,015 mm measured in the spindle nose
» wide bed, inductively hardened
» crossfeed (TU 3018 (Vario))
» longitudinal feed (TU 2807 (Vario) / TU 3018 (Vario))
» lead screw cover for a long lifespan
» emergency stop with undervoltage release
» standard with right/left rotation switch
» handwheels with fine scaling

INCLUDED

» 3-jaw chuck 125 / 160 mm
» 2 solid tips
» operating tool
» face plate 225 mm
» chip tray
» splashback
» 4-fold steel holder
» change gear set
» lathe chuck protection

Description	TU 2807	TU 2807 VARIO	TU 3018	TU 3018 VARIO
turning-Ø over machine bed	Ø 280 mm	Ø 290 mm	Ø 300 mm	Ø 300 mm
turning-Ø over compound sleds	Ø 170 mm	Ø 175 mm	Ø 180 mm	Ø 180 mm
centre width	700 mm	700 mm	800 mm	800 mm
centre height	140 mm	145 mm	150 mm	150 mm
bed width	180 mm	180 mm	182 mm	182 mm
spindle bore	Ø 26 mm	Ø 26 mm	Ø 38 mm	Ø 38 mm
spindle taper	MT 4	MT 4	MT 5	MT 5
3-jaw chuck	Ø 125 mm	Ø 125 mm	Ø 160 mm	Ø 160 mm
spindle speed	150 - 2.000 min^{-1}	150 - 2.000 min^{-1}	150 - 2.000 min^{-1}	30 - 3.000 min^{-1}
top slide - travel	60 mm	60 mm	65 mm	65 mm
compound slide - travel	140 mm	145 mm	180 mm	180 mm
pitch - metric	0,2 - 3,5 U/mm	0,2 - 3,5 U/mm	0,2 - 3,5 U/mm	0,2 - 3,5 U/mm
pitch - inch	8 - 56 U/inch	8 - 56 U/inch	8 - 56 U/inch	8 - 56 U/inch
pinole diameter	Ø 30 mm	Ø 30 mm	Ø 38 mm	Ø 38 mm
tailstock sleeve travel	105 mm	105 mm	70 mm	70 mm
tailstock taper absorption	MT 2	MT 2	MT 3	MT 3
motor power	850 Watt / 50 Hz / 230 V	1,1 kW / 50 Hz / 230 V	1,5 kW / 50 Hz / 230 V	2,2 kW / 50 Hz / 230 V
dimensions (L x D x H)	1.220 x 660 x 560 mm	1.220 x 660 x 560 mm	1.420 x 705 x 575 mm	1.420 x 705 x 575 mm
weight	202 kg	210 kg	260 kg	260 kg

	TU 2807	TU 2807 VARIO	TU 3018	TU 3018 VARIO
EAN	**4260364295856**	**4260364295863**	**4260364295870**	**4260364295887**
Item No.	**246 2807**	**246 2817**	**246 3008**	**246 3018**

MD 300-910 / MD 300-910 DIGI

PRECISION GEARED LATHE MACHINE

PIC.: MD 300-910

For technical data check page 63.

MD 300-900 / MD 300-910 DIGI
IDEAL FOR EVERY WORKSHOP AND CRAFTSMEN

» hardened and precisely ground guideways
» camlock spindle holder D 1-4"
» precision gearbox lathe running in oil bath - gear drive feed shaft, lead shaft and stem
» smooth running by hardened and precision-ground gear, hardened and grounded gearwheels and shafts, running in precision bearings in oil bath
» smooth-running gear shaft, running in oil bath
» the running accuracy of the spindle nose < 0,015 mm
» emergency stop and motor protection
» cover for leading spindel
» instep protector at the top slide
» control report

INCL. LED LIGHTNING, COOLANT SYSTEM

» apron wheels running in oil bath
» main spindle with D 1-4" absorption, spindle bore 38 mm, held by 2 adjustable with precision tapered roller bearings
» smooth running main spindle gearwheels
» slide guideways with adjustable V-ledges
» stabile, heavy ripped prismatic bed, double prism guide, bed out of grey iron, hardened and grounded
» neoprene strips to protect the guideways
» right and left rotation shift able at the lathe slide by stem

OPTIONAL EQUIPMENT

» levelling feet M12
» coolant emulsion
» turning tool 12 mm
» quick change tool holder Multifix "A" (5-pcs.)

HEADSTOCK CONTROL

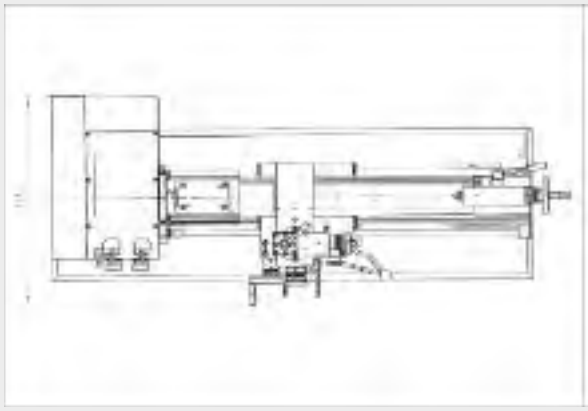

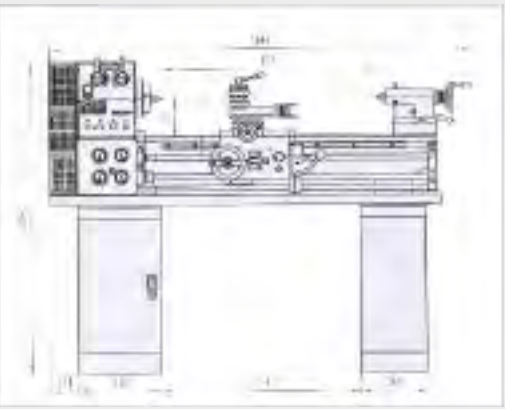

MD 300-900 / MD 300-910 DIGI

INCLUDED

» digital readout model MD 300-910 DIGI
» flexible LED machine light
» coolant system
» 160 mm 3-jaw chuck
» 200 mm 4-jaw chuck
» jaws individually adjustable
» face plate
» fixed steady
» travelling steady
» thread dial indicator
» 2 centering points
» chip tray
» rear splash guard
» operating tools
» foot brake
» substructure
» removable bridge
» electrically pulse button
» jaw chuck with security switch
» 4-way indexing toolpost
» changewheels

Description	MD 300-910	MD 300-910 DIGI
centre width	900 mm	900 mm
centre height	165 mm	165 mm
max swing in gap	215 mm	215 mm
spindle hole	38 mm	38 mm
spindle taper	MT 5	MT 5
tailstock taper	MT 3	MT 3
speeds	18	18
speed	65 - 1.810 min^{-1}	65 -1.810 min^{-1}
longitudinal feed	0,053 - 1,291 mm/U	0,053 - 1,291 mm/U
cross feed	0,011 - 0,276 mm/U	0,011 - 0,276 mm/U
metric - thread	0,4 - 7 mm	0,4 - 7 mm
inch - thread	4 - 60 Gg/1"	4 - 60 Gg/1"
top slide - travel	85 mm	85 mm
compound slide - travel	150 mm	150 mm
3-jaw chuck, diameter	160 mm	160 mm
4-jaw chuck, diameter	200 mm	200 mm
face plate, diameter	255 mm	255 mm
motor power	400 V / 1,5 kW	400 V / 1,5 kW
dimensions (L x D x H)	1.550 x 630 x 570 mm	1.550 x 630 x 800 mm
dimensions with stand (L x L x H)	1.550 x 630 x 1.270 mm	1.550 x 630 x 1.500 mm
weight	450 kg	460 kg
	MD 300-910	**MD 300-910 DIGI**
EAN	**4260364290394**	**4260364290400**
Item No.	**245 0300**	**245 1300**

MD 360-1.000 / MD 360-1.000 DIGI
MD 360-1.000 S DIGI

PRECISION LATHE MACHINES

PIC.: MD 360-1.000 DIGI

Description	MD 360-1.000	MD 360-1.000 DIGI	MD 360-1.000 S DIGI
centre width	1.000 mm	1.000 mm	1.000 mm
centre height	180 mm	180 mm	180 mm
max swing in gap	280 mm	280 mm	280 mm
spindle hole	38 mm	38 mm	38 mm
spindle taper	MT 5	MT 5	MT 5
tailstock taper	MT 3	MT 3	MT 3
speeds	16	16	stepless
speed	45 - 1.800 min^{-1}	45 - 1.800 min^{-1}	40 - 400 min^{-1} 220 - 1.800 min^{-1}
longitudinal feed	0,043 - 0,653 mm/U	0,043 - 0,653 mm/U	0,043 - 0,653 mm/U
cross feed	0,015 - 0,211 mm/U	0,015 - 0,211 mm/U	0,015 - 0,211 mm/U
metric - thread	0,4 - 7 mm/U	0,4 - 7 mm/U	0,4 - 7 mm/U
inch - thread	4 - 70 TPI	4 - 70 TPI	4 - 70 TPI
diametric threads	8 - 144 D.P.	8 - 144 D.P.	8 - 144 D.P.
module threads	0,25 - 3,5 mm	0,25 - 3,5 mm	0,25 - 3,5 mm
top slide - travel	95 mm	95 mm	95 mm
compound slide - travel	180 mm	180 mm	180 mm
3-jaw chuck, diameter	200 mm	200 mm	160 mm
4-jaw chuck, diameter	200 mm	200 mm	200 mm
face plate, diameter	300 mm	300 mm	300 mm
motor power	400 V / 1,5 kW / 2,4 kW	400 V / 1,5 kW / 2,4 kW	400 V / 4,5 kW
dimensions with stand (L x D x H)	1.920 x 750 x 1.500 mm	1.920 x 750 x 1.800 mm	1.920 x 750 x 1.800 mm
weight	700 kg	710 kg	730 kg
	MD 360-1.000	**MD 360-1.000 DIGI**	**MD 360-1.000 S DIGI**
EAN	**4260364290417**	**4260364290424**	**4260364290431**
Item No.	**245 0180**	**245 1180**	**245 2180**

MD 360-1.000 / MD 360-1.000 DIGI / MD 360-1.000 S DIGI

Suitable for production, workshops, toolroom and educational purposes. Lathe MD 360-1.000 DIGI comes with a 3-axis digital readout unit. Modern, high quality precision lathe running in oil bath - gear drive feed shaft, lead shaft and stem, camlock-absorption, induction-hardened machine bed.

» hardened and precise ground guideways
» camlock spindle socket D 1-5“

PIC.: DIGITAL READOUT SYSTEM

» smooth running by hardened and precision-ground gear, hardened and grounded gearwheels and shafts, running in precision bearings in oil bath
» smooth-running gearshift, running in oil bath
» spindle nose runout < 0, 015 mm
» changewheels in lock case running in oil bath
» main spindle with camlock D 1-5", spindle bore 38 mm with 2 high precision adjustable precision tapered bearings
» smooth running main spindle gear wheel
» slide guideways with adjustable V-ledges
» stabile, heavy ripped prismatic bed, double prism guide, bed out of grey iron, hardened and grounded
» scrapers to protect the guideways
» right and left rotation shift able at the lathe slide by stem
» emergency stop, lockable main switch and motor protection
» lead screw protection
» LED working light
» mechanical foot brake
» control report
» model: MD 360-1.000 S DIGI with variable speed adjustment
» manufactured according to DIN 8606

OPTIONAL EQUIPMENT

» quick change toolpost “type B” (5-pcs.)
» machine feet M12
» coolant fluid
» cutting tools 16 mm with reversing plates

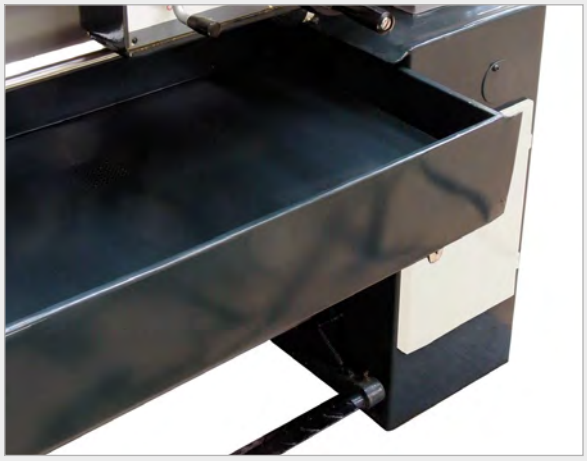

INCLUDED

» digital readout (MD 360-1.000 Digi and MD 360-1.000 S Digi)
» coolant system
» LED working light
» installed machine base
» installed splash guards
» changewheels
» removeable bridge
» foot brake
» jaw chuck shelter with safety switch
» 3-jaw chuck 200 mm, central clamping
» 4 jaw chuck 200 mm, individually adjustable jaws
» face plate Ø 300 mm
» fixed steady
» travelling steady
» threading gauge for multi blade thread
» fixing center point MT 3, rotating center point MT 3, adapter sleeve MT 5 to MT 3
» 4-way toolholder
» operating tool

You can find detailed equipment at page 259.

TU 4210 / TU 4210 DIGI

HEAVY DUTY CENTRE LATHE MACHINE

PIC.: TU 4210 DESIGN FROM 2016
ACTUAL DESIGN AT PAGE 68

Description	TU 4210	TU 4210 DIGI
centre width	1.000 mm	1.000 mm
centre height	205 mm	205 mm
max swing in gap	580 mm	580 mm
spindle hole	52 mm	52 mm
spindle taper	MT 6	MT 6
tailstock taper	MT 4	MT 4
speeds	16	16
speed	45 - 1.800 min^{-1}	45 - 1.800 min^{-1}
longitudinal feed	0,05 - 1,7 mm/U	0,05 - 1,7 mm/U
cross feed	0,025 - 0,85 mm/U	0,025 - 0,85 mm/U
metric - thread	0,2 - 14 mm/U	0,2 - 14 mm/U
inch - thread	2 - 72 Gg/1"	2 - 72 Gg/1"
diametric thread	8 - 44 D.P.	8 - 44 D.P.
module thread	0,3 - 3,5 mm	0,3 - 3,5 mm
top slide - travel	140 mm	140 mm
compound slide - travel	210 mm	210 mm
3-jaw chuck, diameter	200 mm	200 mm
4-jaw chuck, diameter	300 mm	300 mm
face plate, diameter	300 mm	300 mm
motor power	400 V / 4,5 kW	400 V / 4,5 kW
dimensions with stand (L x D x H)	2.025 x 915 x 1.375 mm	2.025 x 915 x 1.375 mm
weight	1.300 kg	1.310 kg
	TU 4210	**TU 4210 DIGI**
EAN	**4260364295894**	**4260364295900**
Item No.	**245 0421**	**245 2420**

INCLUDED

- **3-jaw chuck 200 mm**
- **quick-change toolpost “type B” mounted (5-pcs.)**
- 4-jaw chuck 300 mm
- faceplate 350 mm
- reducing sleeve MT 6 / MT 4
- 2 fixing centres MT 4
- steady and follow rest
- spindle brake
- coolant system
- halogen machine light
- LED working stand
- splash guard
- chuck guard with safety switch
- thread clock
- set of changewheels
- operation tools

TU 4210 / TU 4210 DIGI

» strong and warp resistant construction of the stand and machine bed, made of one piece from cast iron, vibration-absorbing
» 2-step-motor
» hardened and ground bed slideways
» large dimensioned machine bed
» guideways have adjustable V-ledges
» central lubrication in bed slide
» right / left rotation shiftable at bed slide
» detachable bed insert for machining of large work pieces
» adjustable tailstock for producing tapers
» accurate spindle runout < 0,015 mm at spindle nose
» enclosed gear feed, gear wheels and shafts are hardened and ground
» clearly arranged control panel with a strong selection levers for speed selection
» changewheel gears in oil bath with hardened and ground toothed gear wheels
» hand wheels with adjustable fine scale
» main spindle hardened and ground, running on taper bearings in oil bath
» longitudinal feed, detachable by dint of 4 adjustable actuating cams
» mechanical spindle foot brake
» lead screw cover
» control report
» manufactured according to standard "DIN 8606"

Incl. Quick Change Tool Holder "type B" mounted (5-pcs.)

OPTIONAL EQUIPMENT

» machine feet M16 industrial version
» coolant emulsion

PIC.: DRO OF TU 4210 DIGI

TU 4610 / TU 4610 DIGI
TU 4615 / TU 4615 DIGI

HEAVY DUTY CENTRE LATHE MACHINES

PIC.: TU 4615 DIGI

Description	TU 4610	TU 4610 DIGI	TU 4615	TU 4615 DIGI
centre width	1.000 mm	1.000 mm	1.500 mm	1.500 mm
centre height	230 mm	230 mm	230 mm	230 mm
max swing in gap	690 mm	690 mm	690 mm	690 mm
max swing over support	285 mm	285 mm	285 mm	285 mm
spindle hole	58 mm	58 mm	58 mm	58 mm
tailstock taper	MT 4	MT 4	MT 4	MT 4
spindle absorption (Camlock)	1 - 6"	1 - 6"	1 - 6"	1 - 6"
speeds	12	12	12	12
speed	25 - 2.000 min^{-1}	25 - 2.000 min^{-1}	25 - 2.000 min^{-1}	25 - 2.000 min^{-1}
longitudinal feed	0,031 - 1,7 mm/U	0,031 - 1,7 mm/U	0,031 - 1,7 mm/U	0,031 - 1,7 mm/U
cross feed	0,014 - 0,784 mm/U	0,014 - 0,784 mm/U	0,014 - 0,784 mm/U	0,014 - 0,784 mm/U
metric - thread	0,1 - 14 mm/U	0,1 - 14 mm/U	0,1 - 14 mm/U	0,1 - 14 mm/U
inch - thread	2 - 112 Gg/1"	2 - 112 Gg/1"	2 - 112 Gg/1"	2 - 112 Gg/1"
diametric threads	8 - 144 D.P.	8 - 144 D.P.	8 - 144 D.P.	8 - 144 D.P.
module threads	0,25 - 3,5 mm	0,25 - 3,5 mm	0,25 - 3,5 mm	0,25 - 3,5 mm
top slide - travel	128 mm	128 mm	128 mm	128 mm
compound slide - travel	285 mm	285 mm	285 mm	285 mm
3-jaw chuck, diameter	250 mm	250 mm	250 mm	250 mm
4-jaw chuck, diameter	300 mm with individually adjustable jaws	300 mm with individually adjustable jaws	300 mm with individually adjustable jaws	300 mm with individually adjustable jaws
motor power	400 V / 5,5 kW	400 V / 5,5 kW	400 V / 5,5 kW	400 V / 5,5 kW
dimensions with stand (L x D x H)	2.220 x 1080 x 1.370 mm	2.220 x 1080 x 1.600 mm	2.720 x 1080 x 1.370 mm	2.720 x 1080 x 1.600 mm
weight	1.670 kg	1.680 kg	2.070 kg	2.080 kg

	TU 4610	TU 4610 DIGI	TU 4615	TU 4615 DIGI
EAN new design	**4260364295917**	**4260364295924**	**4260364295931**	**4260364295948**
Item No. new design	**245 0462**	**245 2460**	**245 0463**	**245 2465**

TU 4610 / TU 4610 DIGI
TU 4615 / TU 4615 DIGI

Heavy duty gap bed centre lathe with extensive standard equipment. Smooth running and low-vibration.
Mounted on heavy stand and machine bed.

» strong and warp resistant construction of the stand and machine bed, made of one-piece vibration free cast iron
» hardened and ground bed slideway
» large dimensioned machine bed
» guideways have adjustable V-ledges
» central lubrication in bed slide
» right / left spindle rotation shiftable at bed slide
» detachable bed insert for machining of large work piece diameters
» adjustable tailstock for producing tapers
» accurate spindle runout < 0,015 mm at spindle nose
» enclosed gear feed, gear wheels and shafts hardened and grounded
» clearly arranged control panel with a strong lever for speed selection
» oil bath changewheel gears with hardened and ground toothed gear wheels
» hand wheels with adjustable fine scale
» main spindle hardened and ground, running on taper bearings in oil bath
» longitudinal feed, disengageable by four adjustable cam
» mechanical spindle foot brake
» lead screw cover
» acceptance report
» manufactured according to standard "DIN 8606"

INCLUDED EXTRAS

» 3-jaw chuck 250 mm
» quick-change toolpost “type B” mounted (5-pcs.)
» 4-jaw chuck 300 mm
» faceplate 350 mm
» reducing sleeve MT 6 / MT 4
» 2 fixing centres MT 4
» steady and follow rest
» spindle brake
» coolant system
» LED working light
» machine stand
» splash guard
» chuck guard with safety switch
» thread clock
» set of changewheels
» operation tools

Available with or without DRO.

Optional Equipment

	Description	Art.-No.			Description	Art.-No.	
	Quick Change Tool Holder Typ Multifix A	545 2201			Turning Tool 16 mm	545 2216	
	Quick Change Tool Holder Typ Multifix B	545 2202			Mounting Set	545 1112	
	Turning Tool 10 mm	545 0210					
	Turning Tool 12 mm	545 0212					
	Turning Tool 10 mm	545 1210					
	Turning Tool 12 mm	545 1212					
	Turning Tool 12 mm	545 2212					

You can find detailed equipment at page 259.

TU 5615 DIGI
TU 5620 DIGI / TU 5630 DIGI

HEAVY DUTY CENTRE LATHE MACHINES

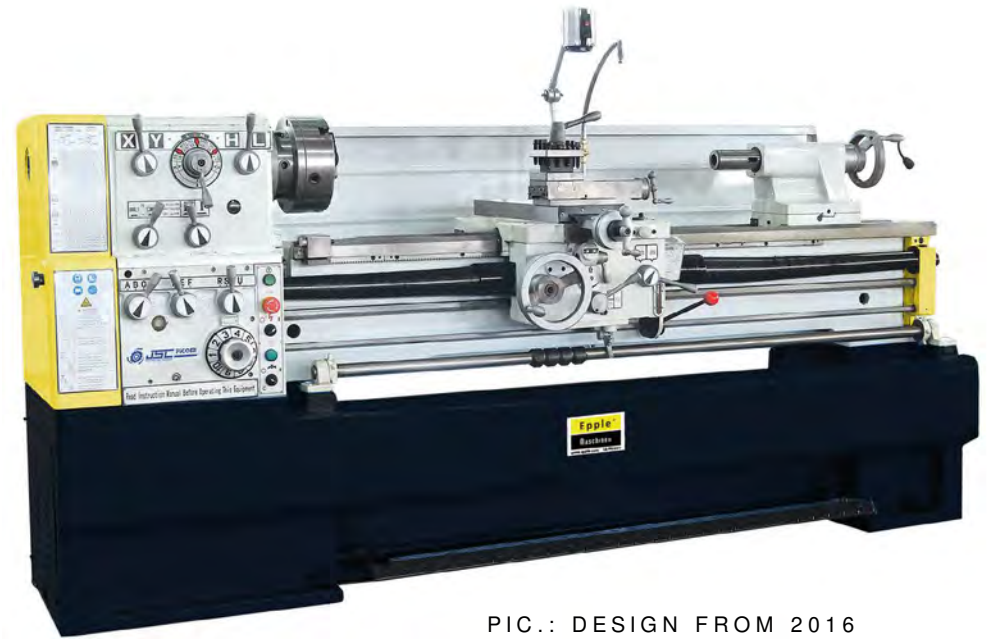

PIC.: DESIGN FROM 2016
NEW DESIGN AT PAGE 68

Description	TU 5615 DIGI	TU 5620 DIGI	TU 5630 DIGI
centre width	1.500 mm	2.000 mm	3.000 mm
centre height	280 mm	280 mm	280 mm
spindle hole	105 mm	105 mm	105 mm
max swing over support	326 mm	326 mm	326 mm
tailstock taper	MT 5	MT 5	MT 5
spindle absorption (Camlock)	1 - 7"	1 - 7"	1 - 7"
speeds	12	12	12
speed	25 - 1.600 min^{-1}	25 - 1.600 min^{-1}	25 - 1.600 min^{-1}
longitudinal feed	0,059 - 1,646 mm/U	0,059 - 1,646 mm/U	0,059 - 1,646 mm/U
cross feed	0,02 - 0,573 mm/U	0,02 - 0,573 mm/U	0,02 - 0,573 mm/U
metric - threads	0,2 - 14 mm/U	0,2 - 14 mm/U	0,2 - 14 mm/U
inch - threads	112 - 2 Gg/1"	112 - 2 Gg/1"	112 - 2 Gg/1"
diametric threads	-	-	-
module threads	-	-	-
top slide - travel	130 mm	130 mm	130 mm
compound slide - travel	325 mm	325 mm	325 mm
3-jaw chuck, diameter	315 mm	315 mm	315 mm
4-jaw chuck, diameter	400 mm with adjustable jaws	400 mm with adjustable jaws	400 mm with adjustable jaws
motor power	400 V / 7,5 kW	400 V / 7,5 kW	400 V / 7,5 kW
dimensions with stand (L x D x H)	2.750 x 1.080 x 1.370 mm	3.250 x 1.080 x 1.600 mm	3.250 x 1.080 x 1.600 mm
weight	2.150 kg	2.290 kg	2.680 kg

	TU 5615 DIGI	TU 5620 DIGI	TU 5630 DIGI
EAN new design	**4260364295955**	**4260364295962**	**4260364295979**
Item No. new design	**245 2560**	**245 2565**	**245 2562**

Description on page 72.

TU 6615 DIGI / TU 6620 DIGI TU 6630 DIGI

HEAVY DUTY CENTRE LATHE MACHINES

PIC.: TU 5615

Description	TU 6615 DIGI	TU 6620 DIGI	TU 6630 DIGI
centre width	1.500 mm	2.000 mm	3.000 mm
centre height	330 mm	330 mm	330 mm
spindle hole	105 mm	105 mm	105 mm
max swing over support	455 mm	455 mm	455 mm
tailstock taper	MT 5	MT 5	MT 5
spindle absorption (Camlock)	1 - 8"	1 - 8"	1 - 8"
speeds	16	16	16
speed	25 - 1.600 min^{-1}	25 - 1.600 min^{-1}	25 - 1.600 min^{-1}
longitudinal feed	0,044 - 1,48 mm/U	0,044 - 1,48 mm/U	0,044 - 1,48 mm/U
cross feed	0,022 - 0,74 mm/U	0,022 - 0,74 mm/U	0,022 - 0,74 mm/U
metric - threads	0,45 - 120 mm/U	0,1 - 14 mm	0,1 - 14 mm
inch - threads	80 - 7/16 Gg/1"	2 - 112 Gg/1"	2 - 112 Gg/1"
diametric threads	7/8 - 160 D.P.	7/8 - 160 D.P.	7/8 - 160 D.P.
module threads	0,25 - 60 M.P	0,25 - 60 M.P	0,25 - 60 M.P
top slide - travel	130 mm	130 mm	130 mm
compound slide - travel	355 mm	355 mm	355 mm
3-jaw chuck, diameter	315 mm	315 mm	315 mm
4-jaw chuck, diameter	400 mm	400 mm	400 mm
motor power	400 V / 7,5 kW	400 V / 7,5 kW	400 V / 7,5 kW
dimensions with stand (L x D x H)	3.050 x 1.230 x 1.595 mm	3.650 x 1.230 x 1.880 mm	4.650 x 1.230 x 1.880 mm
weight	2.420 kg	2.810 kg	3.650 kg
	TU 6615 DIGI	**TU 6620 DIGI**	**TU 6630 DIGI**
EAN new design	**4260364295986**	**4260364295993**	**4260364296006**
Item No. new design	**245 2661**	**245 2662**	**245 2663**

Description on page 72.

Heavy Duty Centre Lathe Machines

TU 5615 DIGI / TU 5620 DIGI
TU 5630 DIGI / TU 6615 DIGI
TU 6620 DIGI / TU 6630 DIGI

Lead screw- and center lathe in heavy duty design with extensive standard equipment. Smooth running and low-vibration. Mounted on heavy stand and machine bed.

» strong and warp resistant construction of the stand and machine bed, made of one-piece vibration free cast iron.
» hardened and ground bed slideway
» large dimensioned machine bed
» guideways have adjustable V-ledges
» central lubrication in bed slide
» right / left spindle rotation shiftable at bed slide
» detachable bed insert for machining of large work pieces
» adjustable tailstock for producing tapers
» accurate spindle runout < 0,015 mm at spindle nose
» enclosed gear feed, gear wheels and shafts hardened and grounded
» clearly arranged control panel with a strong lever for speed selection
» oil bath changewheel gears with hardened and ground toothed gear wheels
» hand wheels with adjustable fine scale
» main spindle hardened and ground, running on taper bearings in oil bath
» longitudinal feed, disengageable by 4 adjustable switching cams
» mechanical spindle foot brake
» lead screw cover
» acceptance report
» manufactured according to standard "DIN 8606"

INCLUDED

» 3-jaw chuck 315 mm
» 4-jaw chuck 400 mm, jaws individually adjustable
» reducing sleeve MT 5/MT 4
» 2 fixing centres MT 4
» steady and follow rest
» spindle brake
» coolant system
» LED machine lamp with hinged arm
» machine stand
» splash guard
» chuck guard with safety switch
» thread clock
» changewheels
» operation tools

PIC.: DRO

OPTIONALES ZUBEHÖR

» Quick Change Tool Holder Multifix Typ C/D

Optional Equipment

	Description	Art.-No.			Description	Art.-No.	
	Quick Change Tool Holder Typ Multifix C	545 2203			Turning Tool 16 mm	545 2216	
	Quick Change Tool Holder Typ Multifix D				Mounting Set	545 1112	
	Turning Tool 10 mm	545 0210					
	Turning Tool 12 mm	545 0212					
	Turning Tool 10 mm	545 1210					
	Turning Tool 12 mm	545 1212					
	Turning Tool 12 mm	545 2212					

You can find detailed equipment at page 259.

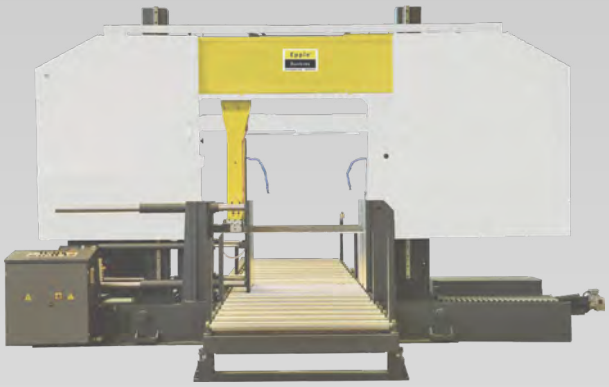

Sawing

BS 125 GS

METAL BAND SAW

Das Original Epple Maschinen®

BS 125 GS

- » smooth and vibrationless running
- » ergonomically shaped, comfortable handle
- » transport locking
- » high production quality and performance
- » stepless adjustment of cutting speed
- » swivel saw arm
- » material stop
- » flexible use for horizontal and vertical sawing

Improved construction
With strongly ribbed arm, improved scale, holding bow as well as further improvements.

Bezeichnung	BS 125 GS
cutting range 90°	round 125 mm flat 120 x 120 mm rectangular 120 mm
cutting range 45°	round 70 mm flat 120 x 70 mm rectangular 70 mm
cutting range 60°	round 35 mm flat 65 x 35 mm rectangular 35 mm
mitre	45° / 60°
cutting speed	30 - 80 m/min
saw band length	1.440 x 13 x 0,65 mm
motor power	230 V / 50 Hz / 1,2 kW
dimensions (L x D x H)	740 x 315 x 700 mm
weight	21 kg

	BS 125 GS
EAN	**4260364290509**
Item No.	**230 1125**

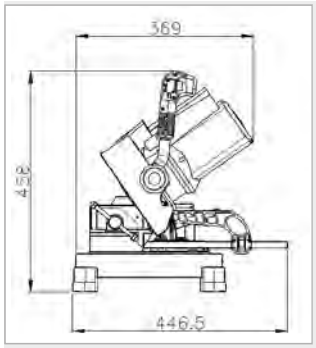

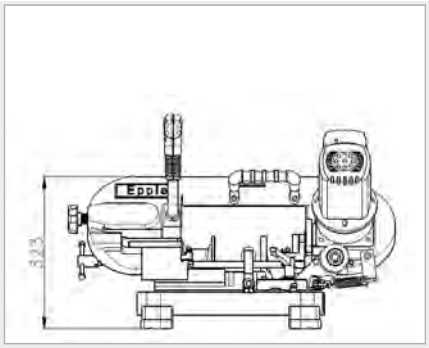

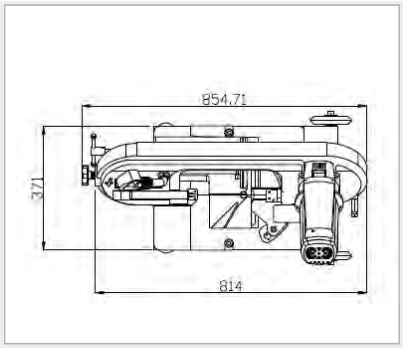

BS 128 DG

METAL BAND SAW

BS 128 DG

» stepless, hydraulic lowering of the saw bow
» automatic limit stop
» manual bandsaw with swivel arm
» 3 different cutting speeds possible via belt adjustment
» swivel head, both sides from -45° to +60°
» material dead stop (not pictured)
» quick - release chuck vice
» transportable stand and transport handle

Description	BS 128 DG
cutting capacity circular	128 mm
cutting capacity rectangular	128 x 150 mm
cutting range at 45°	round 95 mm, flat 95 x 75 mm
cutting range at 60°	round 44 mm, flat 44 x 56 mm
mitre	von -45° bis +60°
cutting speed	20 / 29 / 50 m/min
saw band length	1.638 x 13 x 0,65 mm
motor power	230 V / 50 Hz / 550 W
inlet height	750 mm
dimensions (L x D x H)	960 x 540 x 610 mm
weight	85 kg

	BS 128 DG
EAN	**4260364290516**
Item No.	**129 0128**

You can find detailed equipment at page 259.

BS 151 GS

METAL BAND SAW

BS 151 GS

» stepless, hydraulic lowering of the saw bow
» manual bandsaw with swivel arm
» mitre swivel range until right 60°
» material dead stop (not pictured)
» manual bandsaw with swivel arm
» solid undercarriage for hard everyday use included

Description	BS 151 GS
cutting range round	150 mm
cutting range rectangular	150 x 140 mm
mitre	+45° / +60°
mitre cutting circular	90 mm / 65 mm
mitre cutting rectangular	90 x 100 mm / 65 x 70 mm
cutting speed	30 - 80 m/min
saw blade length	1.785 x 13 x 0,9 mm
motor power	230 V / 50 Hz / 1.2 kW
dimensions (L x D x H)	940 x 370 x 1.490 mm
weight	77 kg
	BS 151 GS
EAN	**4260364290523**
Item No.	**230 1151**

You can find detailed equipment at page 259.

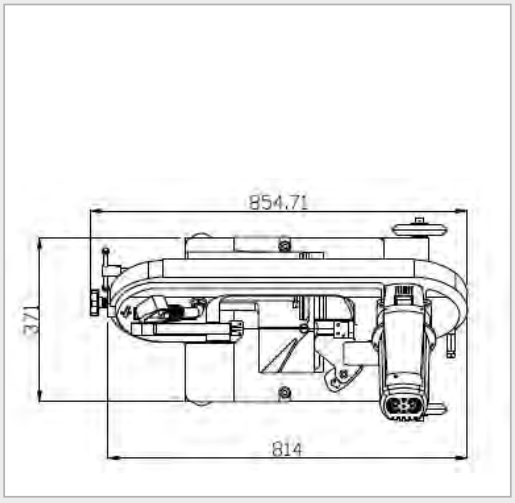

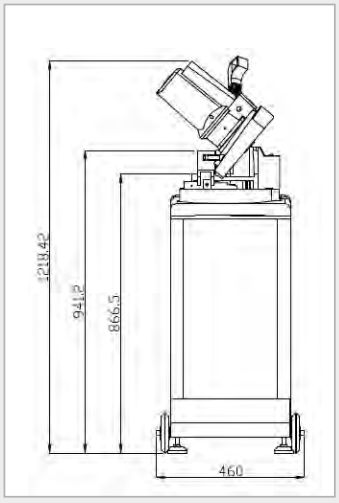

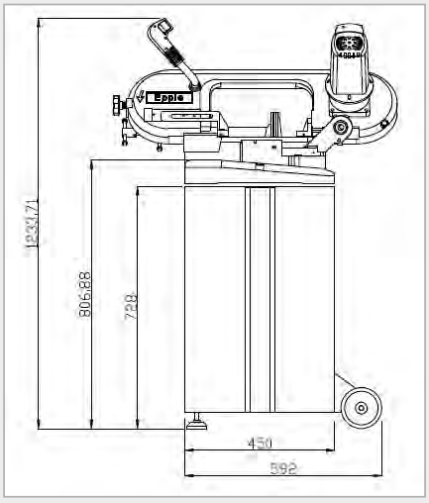

Machine only available without chasses

BS 180 / BS 180 G

METAL BAND SAWS

PIC.: BS 180 G

BS 180 / BS 180 G

» high processing quality and equipment
» hardened gear in box wheels hardened and ground
» mitre swivel range up to right 45 °
» coolant collecting tank and cooling device
» material stop
» robust undercarriage for hard everyday use
» mitre adjustment for BS 180 via vice

You can find detailed equipment at page 259.

Description	BS 180	BS 180 G
cutting capacity circular	178 mm	180 mm
cutting capacity rectangular	305 x 178 mm	260 x 180 mm
mitre	+45°	+45°
mitre circular	127 mm	125 mm
mitre cut rectangular vierkant	125 x 120 mm	105 x 120 mm
cutting speed	22 / 34 / 49 / 64 m/min with change belt	39 / 66 / 82 m/min with gear
saw band length	2.360 x 20 x 0,9 mm	2.360 x 20 x 0,9 mm
motor power	400 V / 50 Hz / 750 W	400 V / 50 Hz / 750 W
dimensions (L x D x H)	1.250 x 510 x 1.140 mm	1.300 x 560 x 1.120 mm
weight	140 kg	175 kg
	BS 180	**BS 180 G**
EAN	**4260364296013**	**4260364296020**
Item No.	**130 0180**	**130 1180**

BS 230 V / BS 230 VG

METAL BAND SAWS

PIC.: BS 230 V

PIC.: BS 230 VG

BS 230 V / BS 230 VG

» smooth and vibrationless running
» high converting quality and equipment
» precise cutting - no run of band because of stable cast iron construction and ball bedded 4 point saw band guidance over 4 guidance dual ball bearings
» very fast and commercial sawing because saw band is sawing constantly. 100% utilisation of saw bands and high durability (in comparison to bow saws)
» gear wheels hardened and ground, running in oil bath
» variable speed control
» high electrical safety equipment and with lockable main current caste
» stepless, hydraulic lowering of the saw bow
» mitre swiveling saw bow (BS 230 VG)
» mitre swivel range up to 45° on the right
» bearing pressure stepless adjustable from 0 to max. with hydraulic cylinder
» tape tension attachment with scale for an ideal tape tension
» chipbrush
» automatic limit stop
» quick - release chuck vice
» material dead stop
» cooling liquid tank and coolant system
» fill level display of cooling liquid case
» clearly arranged, ergonomic control panel at bow
» length dead stop
» robust stand for hard daily insert is included in the scope of supply

Description	BS 230 V	BS 230 VG
cutting range circular	229 mm	229 mm
cutting range rectangular	405 x 127 mm	405 x 127 mm
cutting range at 45° circular	150 mm	150 mm
cutting range at 45° rectangular	190 x 150 mm	190 x 150 mm
speeds	18 - 102 m/min	18 - 102 m/min
blade dimensions	3.215 x 27 x 0,9 mm	3.215 x 27 x 0,9 mm
motor power	400 V / 50 Hz / 1,5 kW	400 V / 50 Hz / 1,5 kW
inlet height	670 mm	670 mm
dimensions (L x D x H)	1.800 x 770 x 1.140 mm	1.880 x 780 x 1.360 mm
weight	300 kg	320 kg

	BS 230 V	BS 230 VG
EAN	**4260364290578**	**4260364290585**
Item No.	**130 0230**	**130 1230**

BS 275 G / BS 275 GS STEPLESS
BS 275 GF STEPLESS ADJUSTABLE VIA FREQUENCY CONVERTER
METAL BAND SAWS

PIC.: BS 275 G

BS 275 G / BS 275 GS / BS 275 GF

» gearing with hardened and ground worm gear shaft
» 2-speed motor (BS 275 G)
» stepless adjustment of cutting speed (BS 275 GS, BS 275 GF)
» frequency converter (BS 275 GF)
» stepless, hydraulic lowering of the saw bow
» saw bow operable by dint of grab handle
» mitre swiveling saw bow
» automatic limit stop
» material dead stop
» cooling liquid tank and coolant system
» coolant system serial with lever tap and plug
» quick - release chuck vice
» clearly arranged, ergonomic control panel
» thermal fuse and low voltage release
» material plating
» robust stand for hard daily insert is included in the scope of supply
» chipbrush

You can find detailed equipment at page 259.

Description	BS 275 G	BS 275 GS	BS 275 GF
cutting capacity circular	225 mm	225 mm	225 mm
cutting capacity rectangular	245 x 180 mm	245 x 180 mm	245 x 180 mm
mitre cut at 45°	circular 160 mm, rectangular 160 x 160 mm	circular 160 mm, rectangular 160 x 160 mm	circular 160 mm, rectangular 160 x 160 mm
mitre cut at 60°	circular 100 mm, rectangular 100 x 100 mm	circular 100 mm, rectangular 100 x 100 mm	circular 100 mm, rectangular 100 x 100 mm
mitre	up to 60°	up to 60°	up to 60°
cutting speed	45 - 90 m/min	20 - 90 m/min	20 - 90 m/min
saw band length	2.480 x 27 x 0,9 mm	2.480 x 27 x 0,9 mm	2.480 x 27 x 0,9 mm
motor power	400 V / 50 Hz / 1,1 kW	230 V / 50 Hz / 1,5 kW	400 V / 50 Hz / 1,5 kW
dimensions (L x D x H)	1.380 x 580 x 1.290 mm	1.380 x 580 x 1.290 mm	1.380 x 580 x 1.290 mm
inlet height	910 mm	910 mm	910 mm
weight	210 kg	210 kg	220 kg
	BS 275 G	**BS 275 GS**	**BS 275 GF**
EAN	**4260364290592**	**4260364290608**	**4260364290615**
Item No.	**230 1275**	**230 2275**	**230 3275**

BS 280 DGS / BS 280 DGF

METAL BAND SAWS

PIC.: BS 280 DGS

clear ergonomic control panel

BS 280 DGS / BS 280 DGF

» variable speed control
» frequency converter (BS 280 DGF)
» cooling liquid tank and coolant system
» lowering device saw arm stepless adjustable
» saw arm swiveling to
the right 60° and to the left 45°
» material dead stop
» analogue saw band - electric tension display for
ideal cutting for protection of the saw band
» coolant system serial with lever tap and plug
» quick - release chuck vice
» clearly arranged, ergonomic control panel
» robust stand for hard daily insert
» automatic end switch

You can find detailed equipment at page 259.

Description	BS 280 DGS	BS 280 DGF
cutting capacity circular	225 mm	225 mm
cutting capacity rect.	245 x 180 mm	245 x 180 mm
mitre cut at 45°	circular 150 mm, rectangular 150 x 150 mm	circular 150 mm, rectangular 150 x 150 mm
mitre cut at 60°	circular 85 mm, rectangular 85 x 85 mm	circular 85 mm, rectangular 85 x 85 mm
mitre	from -45° up to +60°	from -45° up to +60°
cutting speed	20 - 90 m/min	20 - 90 m/min
saw band length	2.480 x 27 x 0,9 mm	2.480 x 27 x 0,9 mm
motor power	230 V / 50 Hz / 1,5 kW	400 V / 50 Hz / 1,5 kW
dimensions (L x D x H)	1.380 x 705 x 1.500 mm	1.380 x 705 x 1.500 mm
inlet height	980 mm	980 mm
weight	285 kg	300 kg
	BS 280 DGS	**BS 280 DGF**
EAN	**4260364290622**	**4260364290639**
Item No.	**230 1280**	**230 2280**

BS 350 DG / BS 350 DGH SEMI-AUTOMATIC
BS 350 DGHF SEMI-AUTOMATIC WITH FREQUENCY CONVERTER

METAL BAND SAWS

PIC.: BS 350 DGHF

tilting control panel

blade tension device

You can find detailed equipment at page 259.

BS 350 DG / BS 350 DGH / BS 350 DGHF

» 2-speed motor (BS 350 DG, BS 350 DGH)
» variable speed control (BS 350 DGHF)
» frequency converter (BS 350 DGHF)
» material dead stop with scale
» lowering device saw arm stepless adjustable
» mitre swivel range from left -45° to right 60°
» analogue saw band-electric tension display for ideal cutting for protection of the saw band
» serially with bi-metal saw band
» chipbrush
» material dead stop
» coolant system with lever tap and plug
» cooling liquid tank and coolant system
» hydraulic vice, self-locking (BS 350 DGH / BS 350 DGHF)
» control panel pivotable
» clearly arranged, ergonomic control panel
» hard metal and ball bearing guides
» good readable angle scale
» semi-automatic saw operation and limit stop (BS 350 DGH / BS 350 DGHF)

Description	BS 350 DG	BS 350 DGH	BS 350 DGHF
cutting capacity circular	270 mm	270 mm	270 mm
cutting capacity rectangular	350 x 240 mm	350 x 240 mm	350 x 240 mm
mitre cut at +60°	circular 140 mm, rectangular 140 x 140 mm	circular 140 mm, rectangular 140 x 140 mm	circular 140 mm, rectangular 140 x 140 mm
mitre cut at +45°	circular 230 mm, rectangular 230 x 150 mm	circular 230 mm, rectangular 230 x 150 mm	circular 230 mm, rectangular 230 x 150 mm
mitre cut at -45°	circular 200 mm, rectangular 200 x 140 mm	circular 200 mm, rectangular 200 x 140 mm	circular 200 mm, rectangular 200 x 140 mm
mitre	from -45° up to +60°	from -45° up to +60°	from -45° up to +60°
cutting speed	36 / 72 m/min	36 / 72 m/min	36 - 72 m/min
saw band length	2.925 x 27 x 0,9 mm	2.925 x 27 x 0,9 mm	2.925 x 27 x 0,9 mm
motor power	400 V / 50 Hz / 1,9 kW	400 V / 50 Hz / 1,9 kW	400 V / 50 Hz / 1,9 kW
dimensions (L x D x H)	1.765 x 950 x 1.600 mm	1.765 x 950 x 1.600 mm	2.220 x 1.055 x 1.930 mm
inlet height	930 mm	930 mm	930 mm
weight	670 kg	670 kg	700 kg
	BS 350 DG	**BS 350 DGH**	**BS 350 DGHF**
EAN	**4260364290646**	**4260364290653**	**4260364290660**
Item No.	**230 1350**	**230 2350**	**230 3350**

E-BS 230 DG / E-BS 230 DGH
E-BS 230 V

METAL BAND SAWS

PREMIUM-LINE

PIC.: E-BS 230 DG

E-BS 230 DG / E-BS 230 DGH / E-BS 230 V

» semi-automatic machine (E-BS 230 DGH)
» quick vice (E-BS 230 DG)
» hydr. vice (E-BS 230 DGH)
» vice with material drive rollers for the E-BS 230 V

OPTIONAL EQUIPMENT

» stepless cutting speed
» inverter
» roller track
» micro lubrication device

Description	E-BS 230 DG	E-BS 230 DGH	E-BS 230 V
cutting capacity circular cutting capacity flat cutting capacity rectangular	230 mm 320 x 130 mm 230 mm	230 mm 320 x 130 mm 230 mm	230 mm 240 x 230 mm 230 mm
mitre cut at 45°	circular 210 mm / 180 mm flat 230 x 160 mm / 230 x 100 mm rectangular 180 mm / 150 mm	circular 210 mm / 180 mm flat 230 x 160 mm / 230 x 160 mm rectangular 180 mm / 150 mm	-
mitre cut at 60°	circular 120 mm flat 120 x 100 mm rectangular 100 mm	circular 120 mm flat 120 x 100 mm rectangular 100 mm	no swivel
mitre	up to 60°	up to 60°	-
cutting speed	35 - 70 m/min	35 - 70 m/min	35 - 70 m/min
saw band length	2.730 x 27 x 0,9 mm	2.730 x 27 x 0,9 mm	2.730 x 27 x 0,9 mm
motor power	400 V / 50 Hz / 1,3 kW	400 V / 50 Hz / 1,3 kW	400 V / 50 Hz / 1,3 kW
dimensions (L x D x H)	1.350 x 700 x 1.300 mm	1.350 x 700 x 1.300 mm	1.700 x 800 x 1.500 mm
inlet height	760 mm	760 mm	590 mm
weight	415 kg	465 kg	530 kg
	E-BS 230 DG	**E-BS 230 DGH**	**E-BS 230 V**
EAN	**4260364290677**	**4260364290684**	**4260364296037**
Item No.	**330 0230**	**330 1230**	**330 2230**

E-BS 270 DG / E-BS 270 DGH

METAL BAND SAWS

PREMIUM-LINE

PIC.: E-BS 270 DG

E-BS 270 DG / E-BS 270 DGH

» semi-automatic machine (E-BS 270 DGH)
» micro lube facility (optional)
» inverter standard = stepless speed adjustment 20 - 100 m/min
» hydraulic vice (E-BS 270 DGH)

Description	E-BS 270 DG	E-BS 270 DGH
cutting capacity circular cutting capacity flat cutting capacity rectangular	270 mm 350 x 220 mm 270 mm	270 mm 350 x 220 mm 270 mm
mitre cut at 45° circular flat rectangular	240 mm / 210 mm 270 x 200 mm / 270 x 210 mm 170 mm / 180 mm	240 mm / 210 mm 270 x 200 mm / 270 x 210 mm 170 mm / 180 mm
mitre cut at 60° circular flat rectangular	150 mm 150 x 100 mm 100 mm	150 mm 150 x 100 mm 100 mm
mitre	up to 60°	up to 60°
cutting speed	20 - 100 m/min	20 - 100 m/min
saw band length	3.160 x 27 x 0,9 mm	3.160 x 27 x 0,9 mm
motor power	400 V / 50 Hz / 1,5 kW	400 V / 50 Hz / 1,5 kW
dimensions (L x D x H)	1.730 x 770 x 1.460 mm	1.730 x 770 x 1.460 mm
inlet height	910 mm	910 mm
weight	465 kg	525 kg
	E-BS 270 DG	**E-BS 270 DGH**
EAN	**4260364290691**	**4260364290707**
Item No.	**330 0270**	**330 1270**

E-BS 320 H / E-BS 320 V

METAL BAND SAWS

PREMIUM-LINE

PIC.: E-BS 320 V

PIC.: EQUIPMENT: SAWBUCK

E-BS 320 - MODELLE

» micro lubrication device
» inverter for stepless speed control 20 - 100 m/min
» hydraulic clamping of the saw arm, manual turning of saw arm
» full automatic model (E-BS 320 V / E-BS 320 VL)
» semi automatic model (E-BS 320 H / E-BS 320 HL)

OPTIONAL EQUIPMENT

» hydraulic vice
» roller track
» micro lubrication device

Description	E-BS 320 H	E-BS 320 V
cutting capacity circular cutting capacity flat cutting capacity rectangular	320 mm 440 x 220 mm 320 x 320 mm	320 mm 320 x 300 mm 300 x 300 mm
mitre cut at 45° circular flat rectangular	280 mm 280 x 200 mm 260 x 260 mm	-
mitre	up to 45°	-
cutting speed	20 - 100 m/min	20 - 100 m/min
saw band length	3.660 x 27 x 0,9 mm	3.660 x 27 x 0,9 mm
motor power	400 V / 50 Hz / 1,5 kW	400 V / 50 Hz / 2,2 kW
dimensions (L x D x H)	1.900 x 850 x 1.300 mm	1.900 x 850 x 1.350 mm
inlet height	640 mm	640 mm
weight	670 kg	770 kg

	E-BS 320 H	E-BS 320 V
EAN	**4260364290721**	**4260364290738**
Item No.	**330 1320**	**330 2320**

E-BS 320 HL / E-BS 320 VL

METAL BAND SAWS

PREMIUM-LINE

PIC.: E-BS 320 HL

E-BS 320 - MODELLE

» micro lubrication device
» inverter for stepless speed control 20 - 100 m/min
» hydraulic clamping of the saw arm,
manual turning of saw arm
» full automatic model (E-BS 320 V / E-BS 320 VL)
» semi automatic model (E-BS 320 H / E-BS 320 HL)

OPTIONAL EQUIPMENT

» hydraulic vice
» roller track
» micro lubrication device

Description	E-BS 320 HL	E-BS 320 VL
cutting capacity circular cutting capacity flat cutting capacity rectangular	330 mm 610 x 310 mm 330 x 320 mm	330 mm 500 x 320 mm 320 x 320 mm
mitre cut at 45° circular flat rectangular	320 mm 460 x 180 mm 320 x 320 mm	-
mitre	up to +45°	-
cutting speed	20 - 100 m/min	20 - 100 m/min
saw band length	4.160 x 34 x 1,1 mm	4.160 x 34 x 1,1 mm
motor power	400 V / 50 Hz / 2,2 kW	400 V / 50 Hz / 2,2 kW
dimensions (L x D x H)	2.100 x 850 x 1.300 mm	2.100 x 850 x 1.300 mm
inlet height	640 mm	640 mm
weight	773 kg	860 kg
	E-BS 320 HL	**E-BS 320 VL**
EAN	**4260364290752**	**4260364290769**
Item No.	**330 1321**	**330 2321**

PIC.: BACKSIDE

E-BS 320 GV PLC FULLY AUTOMATIC
E-BS 320 GVL PLC FULLY AUTOMATIC

METAL BAND SAWS

PREMIUM-LINE

PIC.: E-BS 320 GV

Description	E-BS 320 GV	E-BS 320 GVL
cutting capacity	circular 320 mm flat 350 x 320 mm rectangular 320 x 320 mm	circular 320 mm flat 610 x 320 mm rectangular 320 x 320 mm
mitre cut at 30°	circular 160 mm flat 150 x 150 mm rectangular 150 x 150 mm	circular 260 mm flat 280 x 200 mm rectangular 225 x 225 mm
mitre cut at 45°	circular 260 mm flat 250 x 180 mm rectangular 180 x 180 mm	circular 320 mm flat 355 x 320 mm rectangular 320 x 320 mm
mitre cut at 60°	circular 300 mm flat 300 x 200 mm rectangular 250 x 250 mm	circular 320 mm flat 510 x 320 mm rectangular 320 x 320 mm
mitre cut at 75°	circular 320 mm flat 350 x 200 mm rectangular 300 x 300 mm	circular 320 mm flat 580 x 320 mm rectangular 320 x 320 mm
mitre	75°	75°
cutting speed	20 - 100 m/min	20 - 100 m/min
saw band length	3.660 x 27 x 0,9 mm	4.160 x 34 x 1,1 mm
motor power	400 V / 50 Hz / 2,2 kW	400 V / 50 Hz / 2,2 kW
dimensions (L x Dx H)	2.200 x 2.100 x 1.500 mm	2.400 x 2.370 x 1.500 mm
inlet height	740 mm	740 mm
weight	1.660 kg	2.060 kg

	E-BS 320 GV	E-BS 320 GVL
EAN	**4260364290776**	**4260364290783**
Item No.	**330 3320**	**330 3321**

E-BS 320 GV / E-BS 320 GVL

» fully automatic
» micro lubrication device
» inverter for stepless speed control 20 - 100 m/min
» hydraulic vice
» digital angle display
» hydraulic clamping of the saw arm, manual turning of saw arm
» saw arm swivel up to 60°

STANDARD

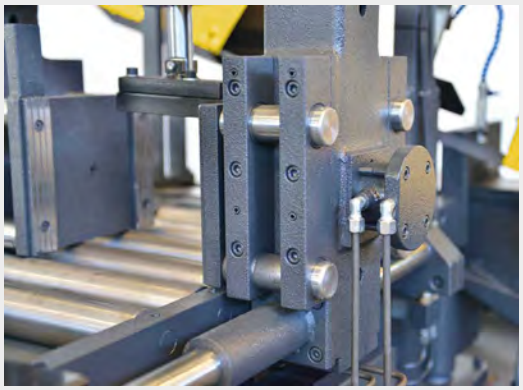

OPTIONAL

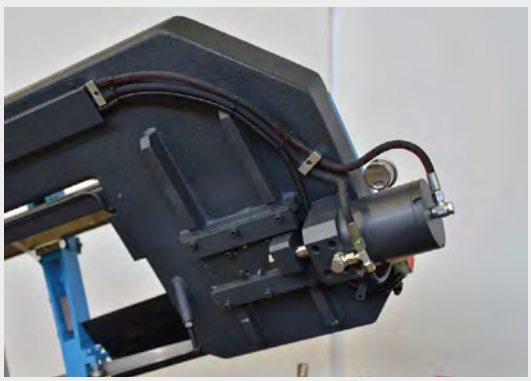

E-BSP 325 GH / E-BSP 325 GV

METAL BAND SAWS

NEW

PREMIUM-LINE

PIC.: E-BSP 325 GV

Description	E-BSP 325 GH	E-BSP 325 GV
cutting capacity 0°	circular 325 mm flat 400 x 320 mm rectangular 320 mm	circular 325 mm flat 400 x 315 mm rectangular 315 mm
mitre cut at +30°	circular 325 mm flat 360 x 320 mm rectangular 320 mm	circular 325 mm flat 380 x 315 mm rectangular 315 mm
mitre cut at +45°	circular 305 mm flat 270 x 320 mm rectangular 270 mm	circular 300 mm flat 300 x 315 mm rectangular 300 mm
mitre cut at +60°	circular 190 mm flat 180 x 240 mm rectangular 180 mm	circular 200 mm flat 200 x 315 mm rectangular 200 mm
mitre	up to +60°	up to +60°
cutting speed	20 - 100 m/min	20 - 100 m/min
saw band length	4.380 x 34 x 1,1 mm	4.380 x 34 x 1,1 mm
motor power	400 V / 50 Hz / 2,2 kW	400 V / 50 Hz / 2,2 kW
dimensions (L x D x H)	2.100 x 1.050 x 1.600 mm	2.130 x 2.150 x 1.650 mm
inlet height	640 mm	655 mm
weight	1.185 kg	1.860 kg

	E-BSP 325 GH	E-BSP 325 GV
EAN	**4260364296051**	**4260364290790**
Item No.	**330 1325**	**330 2325**

E-BSP 325 GH / E-BSP 325 GV

» semi-automatic (E-BSP 325 GH)
» fully-automatic (E-BSP 325 GV)
» mitre
» inverter standard = stepless adjustable speed 20 - 100 m/min
» hydraulic vice
» digital readout for angle display
» hydraulic clamping of the saw arm, manual turning of saw arm
» saw band ilted for 3°
» due to sensors there is automatic saw speed adjustment
» saw mill is made of solid steel
» synchronization of tape guide and vise
» angular toothed conical heavy-duty gearbox
» hydraulic vice clamping over the entire clamping range
» hydromechanical tape tension is readable via manometer
» mobile control panel
» high-quality hydraulic components
» powered chip brush
» substructure and arm are a heavy welding construction
» vertical movement with high-precision linear guides

STANDARD

OPTIONAL

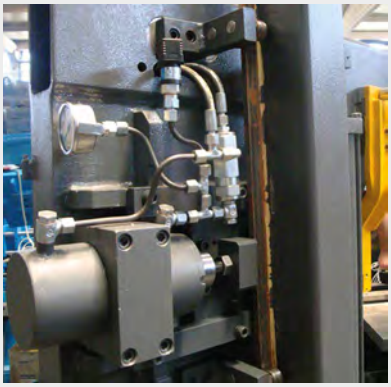

E-BSP 330 NC

METAL BAND SAW

PREMIUM-LINE

E-BSP 330 NC

» band saw with servo drives
» user-friendly on-screen PLC control
» hydromechanical belt tensioning
» chip brush
» divided hydraulic vice
» chip conveyor

OPTIONAL EQUIPMENT

» hydraulic blade tension
» hexagon bundle vice
» microspray coolant system
» material roller conveyor
» 4 kW motor
» machine cladding

Description	E-BSP 330 NC
cutting capacity 0° circular cutting capacity 0° flat cutting capacity 0° rect.	330 mm 360 x 330 mm 330 mm
cutting speed	20 - 100 m/min stepless
saw blade length	4.380 x 34 x 1,1 mm
motor power	400 V / 50 Hz / 3 kW
dimensions (L x D x H)	2.100 x 2.300 x 1.560 mm
infeed height	850 mm
weight	2.120 kg

	E-BSP 330 NC
EAN	**4260364297348**
Item No.	**330 2330**

STANDARD

E-BSPC 330 NC

METAL BAND SAW

NEW

PREMIUM-LINE

E-BSPC 330 NC

» band saw with servo drives
» user-friendly on-screen PLC control
» hydromechanical belt tensioning
» chip brush
» divided hydraulic vice
» chip conveyor
» full machine cladding

OPTIONAL EQUIPMENT

» hydraulic blade tension
» hexagon-bundle vice
» microspray coolant system
» material roller conveyor
» 4 kW Motor

STANDARD

Description	E-BSPC 330 NC
cutting capacity 0° circular cutting capacity 0° flat cutting capacity 0° rect.	330 mm 360 x 330 mm 330 mm
cutting speed	20 - 100 m/min stepless
saw blade length	4.380 x 34 x 1,1 mm
motor power	400 V / 50 Hz / 3,0 kW
dimensions (L x D x H)	2.625 x 1.900 x 1.900 mm
infeed height	850 mm
weight	2.150 kg

	E-BSPC 330 NC
EAN	**4260364297706**
Item No.	**330 2331**

E-BS 360 DGH ECO

METAL BAND SAW

PREMIUM-LINE

Description	E-BS 360 DGH ECO
cutting capacity 0°	circular 360 mm flat 510 x 360 mm rectangular 360 mm
mitre cut at +30° / -30°	circular 360 mm flat 510 x 360 mm rectangular 360 mm
mitre cut at +45° / -45°	circular 360 mm flat 390 x 360 mm rectangular 360 mm
mitre cut at +60°	circular 200 mm flat 200 x 360 mm rectangular 200 mm
mitre cut at -60°	circular 260 mm flat 260 x 360 mm rectangular 260 mm
mitre	up to ±60°
cutting speed	20 - 100 m/min
saw band length	4.800 x 34 x 1,1 mm
motor power	400 V / 50 Hz / 3 kW
dimensions (L x D x H)	2.800 x 1.210 x 1.870 mm
inlet height	860 mm
weight	1.450 kg

	E-BS 360 DGH ECO
EAN	**4260364296068**
Item No.	**330 2361**

You can find detailed equipment at page 259.

E-BS 360 DGH ECO (WITH CLAMPING SPRINGS FOR SAW BLADES)

» semi-automatic double miter band saw in excellent price-performance ratio for sawing profiles and solid material in steel and other metals
» robustly constructed monoblock saw frame
» manual swiveling saw frame with hydraulic clamping to the optimum swivel adjustment
» mitre angle can be read digitally on mobile control panel
» hydraulic clamping of the horizontal clamping block
» automatic sawmill lifting after cutting
» infinitely adjustable belt speed 20 - 100 m/min
» sensitive cutting pressure regulation depending on material characteristics
» hydraulic mechanical tensioning
» tape guide on hard metal plates and rolls
» thermal overload protection and undervoltage release
» automatic shutdown after cutting
» automatic belt breakage protection
» chip brush driven by impeller

STANDARD

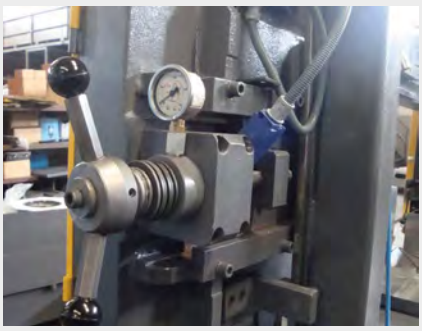

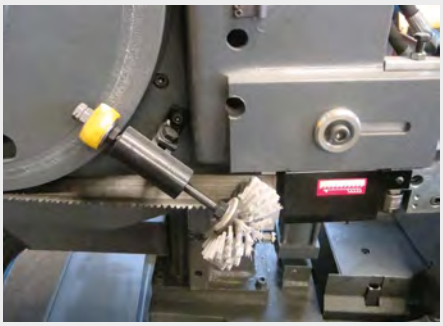

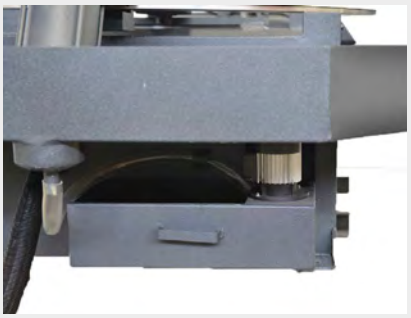

OPTIONAL

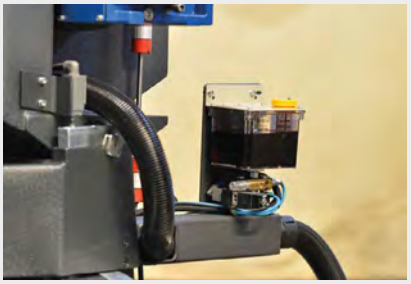

E-BS 360 DGH / E-BS 440 DGH

METAL BAND SAWS

PREMIUM-LINE

PIC.: E-BS 360 DGH

Description	E-BS 360 DGH	E-BS 440 DGH
cutting capacity 0°	circular 360 mm flat 610 x 360 mm rectangular 360 x 360 mm	circular 440 mm flat 610 x 440 mm rectangular 440 x 440 mm
mitre cut at +30° / -30°	circular 360 mm flat 610 x 360 mm rectangular 360 x 360 mm	circular 440 mm flat 500 x 440 mm rectangular 440 x 440 mm
mitre cut at +45° / -45°	circular 360 mm flat 490 x 360 mm rectangular 360 x 360 mm	circular 410 mm flat 410 x 440 mm rectangular 410 x 410 mm
mitre cut at +60° / -60°	circular 340 mm / 360 mm flat 300 x 360 mm / 360 x 360 mm rectangular 300 x 300 mm / 360 x 360 mm	circular 320 mm flat 440 x 250 mm / 285 x 440 mm rectangular 250 x 250 mm / 285 x 285 mm
mitre	from -60° up to +60°	from -60° up to +60°
cutting speed	20 - 100 m/min	20 - 100 m/min
saw band length	5.000 x 34 x 1,1 mm	5.200 x 34 x 1,1 mm
motor power	400 V / 50 Hz / 3 kW	400 V / 50 Hz / 3 kW
dimensions (L x D x H)	2.750 x 1.210 x 1.870 mm	2.900 x 1.210 x 1.870 mm
inlet height	860 mm	860 mm
weight	1.470 kg	1.570 kg

	E-BS 360 DGH	E-BS 440 DGH
EAN	**4260364290806**	**4260364290813**
Item No.	**330 2360**	**330 2440**

E-BS 360 DGH / E-BS 440 DGH

» semi-automatic machine
» double mitre
» inverter equipped: stepless driving speed adjustment 20 - 100 m/min
» hydraulic vice
» digital display for angle adjustment
» hydraulic clamping of the saw arm, saw arm turning by hand
» saw arm swivel +/-60°
» stepless adjustable lowering speed of the saw arm by manometer to read the lowering speed
» hydraulic balancing system to generate always the same sawing pressure and thereby reduce vibrations
» slant toothed, conical heavy duty gearbox
» hydraulic vice clamping across the entire clamping area
» large cutting width of up to 610 mm
» hydro mechanical strip tension readable on manometer
» mobile control panel
» high-quality hydraulic components
» driven chip brush
» stand and arm are heavy welded constructions

You can find detailed equipment at page 259.

STANDARD

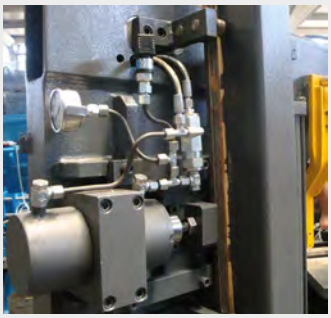

OPTIONAL

E-BSP 360 GV / E-BSP 440 GV

METAL BAND SAWS

PREMIUM-LINE

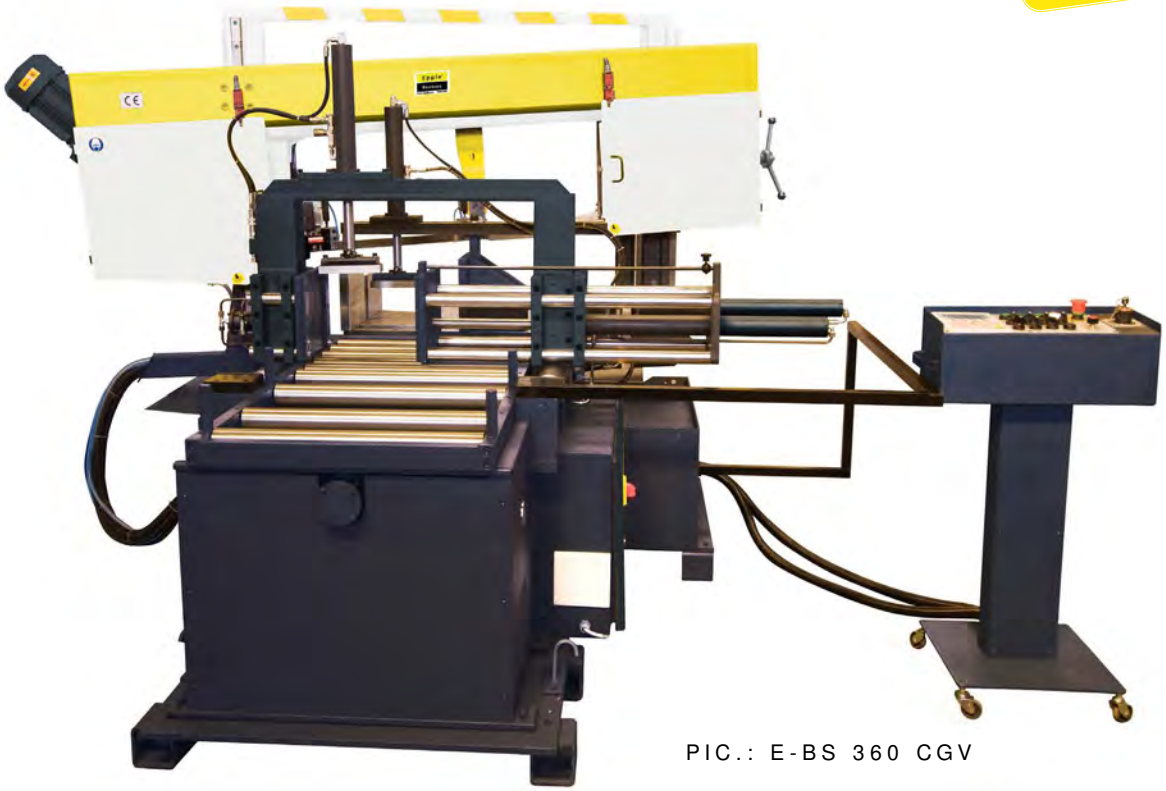

PIC.: E-BS 360 CGV

Description	E-BSP 360 GV	E-BSP 440 GV
cutting capacity 0°	circular 360 mm flat 610 x 360 mm rectangular 360 x 360 mm	circular 450 mm flat 610 x 425 mm rectangular 425 x 425 mm
cutting capacity +30°	circular 360 mm flat 590 x 360 mm rectangular 360 x 360 mm	circular 450 mm flat 560 x 425 mm rectangular 425 x 425 mm
cutting capacity +45°	circular 360 mm flat 450 x 360 mm rectangular 360 x 360 mm	circular 430 mm flat 430 x 425 mm rectangular 425 x 425 mm
cutting capacity +60°	circular 325 mm flat 280 x 360 mm rectangular 290 x 290 mm	circular 320 mm flat 260 x 425 mm rectangular 290 x 290 mm
mitre	from 0° up to +60°	from 0° up to +60°
cutting speed	20 - 100 m/min	20 - 100 m/min
saw band length	5.200 x 34 x 1,1 mm	5.400 x 41 x 1,3 mm
motor power	400 V / 50 Hz / 3 kW	400 V / 50 Hz / 4 kW
dimensions (L x D x H)	2.850 x 2.100 x 1.820 mm	2.850 x 2.100 x 1.950 mm
inlet height	705 mm	705 mm
weight	2.400 kg	2.480 kg

	E-BSP 360 GV	E-BSP 440 GV
EAN	**4260364290820**	**4260364290837**
Item No.	**330 3360**	**330 3440**

E-BSP 360 GV / E-BSP 440 GV

» fully automatic
» Inverter Standard = stepless adjustable band speed 20 - 100 m/min
» hydraulic vice
» digital display for angle display
» saw bow inclined by 3°
» due to sensors automatic saw speed adjustment
» hydr. clamping of the saw arm, rotation of the saw arm by hand up to 500 mm material feed at up to 12 times programmable gives a total of up to 6 m of material length
» hydromechanical tape tension can be read off due to the manometer
» hydraulic vice clamp over the entire clamping range
» 10 cutting programs for length and number of pieces
» inclined, tapered heavy-duty gear box
» large cutting width of up to 610 mm
» mobile control panel
» high-quality hydraulic components
» powered chip brush
» stand and arm are heavy welding construction
» profile rail with linear technology for highly precise settings
» double-sided feed clamping

STANDARD

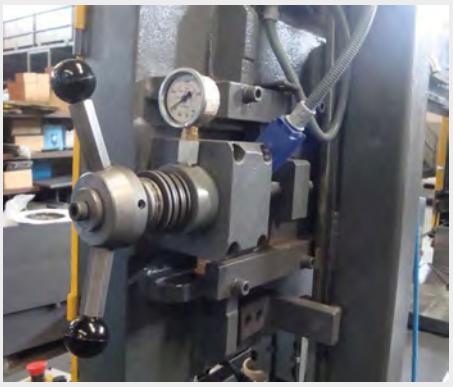

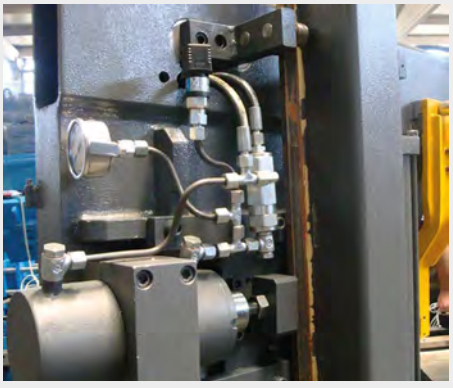

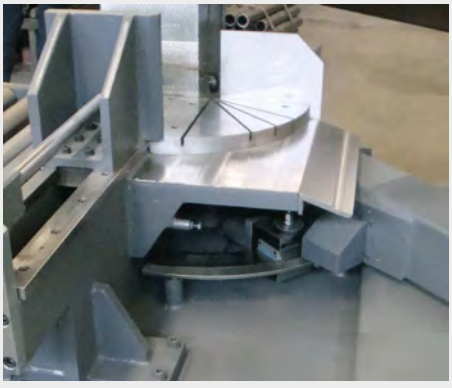

E-BSP 360 DGH / E-BSP 440 DGH

METAL BAND SAW

PREMIUM-LINE

PIC.: E-BSP 360 DGH

You can find detailed equipment at page 259.

Description	E-BSP 360 DGH	E-BSP 440 DGH
cutting capacity 0°	circular 360 mm flat 640 x 360 mm rectangular 360 x 360 mm	circular 440 mm flat 640 x 440 mm rectangular 440 x 440 mm
mitre cut at +30° / -30°	circular 360 mm flat 510 x 360 mm rectangular 360 x 360 mm	circular 440 mm flat 510 x 440 mm rectangular 440 x 440 mm
mitre cut at +45° / -45°	circular 360 mm flat 390 x 360 mm rectangular 360 x 360 mm	circular 440 mm / 390 mm flat 400 x 440 mm / 390 x 440 mm rectangular 400 x 400 mm / 390 x 390 mm
mitre cut at +60°	circular 310 mm flat 250 x 360 mm rectangular 270 x 270 mm	circular 250 mm flat 250 x 440 mm rectangular 250 x 250 mm
mitre	from -30 up to +60°	from -30 up to +60°
cutting speed	20 - 100 m/min	20 - 100 m/min
saw band length	5.000 x 34 x 1,1 mm	5.200 x 41 x 1,3 mm
motor power	400 V / 50 Hz / 3 kW	400 V / 50 Hz / 4 kW
dimensions (L x D x H)	3.000 x 1.200 x 1.910 mm	3.100 x 1.200 x 1.910 mm
inlet height	800 mm	800 mm
weight	1.635 kg	1.780 kg

	E-BSP 360 DGH	E-BSP 440 DGH
EAN	**4260364298277**	**4260364290844**
Item No.	**330 1361**	**330 4440**

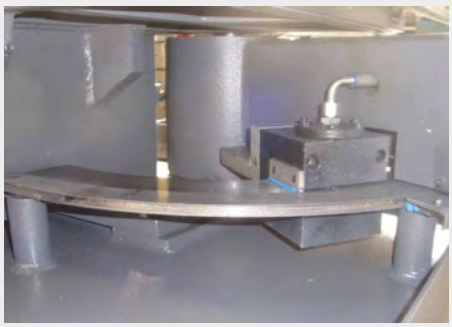

E-BSP 360 DGH / E-BSP 440 DGH

» semi-automatic machine
» double mitre
» inverter equipped: stepless driving speed adjustment 20 - 100 m/min
» hydraulic vice
» digital display for angle display
» hydraulic clamping of the saw arm, manual turning of the saw arm
» saw arm swivel +60°/ -30°
» saw band inclined by 3°
» automatic saw speed adaption by sensors
» synchronization of strip guide and vice, saw bow made of solid steel
» slant toothed, conical heavy duty gearbox
» hydraulic vice clamping across the entire clamping area
» large width of cut up to 640 mm
» hydro mechanical strip tension readable on manometer
» mobile control panel
» high-quality hydraulic components
» driven chip brush
» stand and arm are heavy welded construction
» profile rail is adjusted by linear technique for highly precise movement

STANDARD

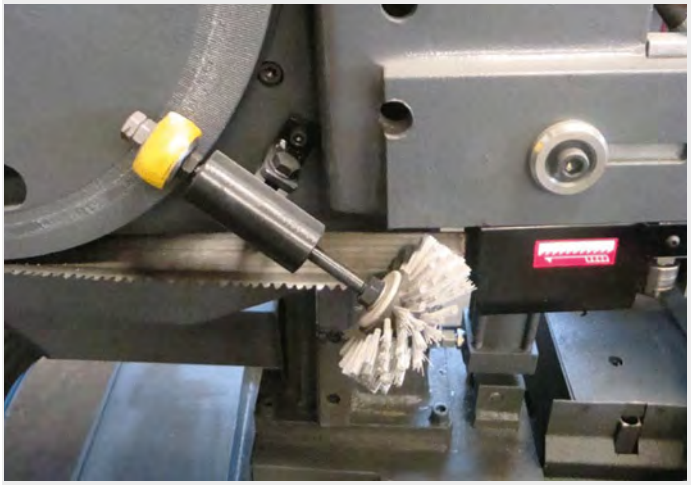

OPTIONAL

micro cooling system

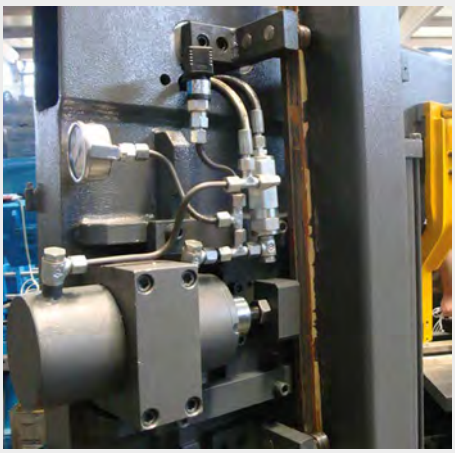

hydraulicblade tensioning

E-BS 440 V

METAL BAND SAW

NEW

PREMIUM-LINE

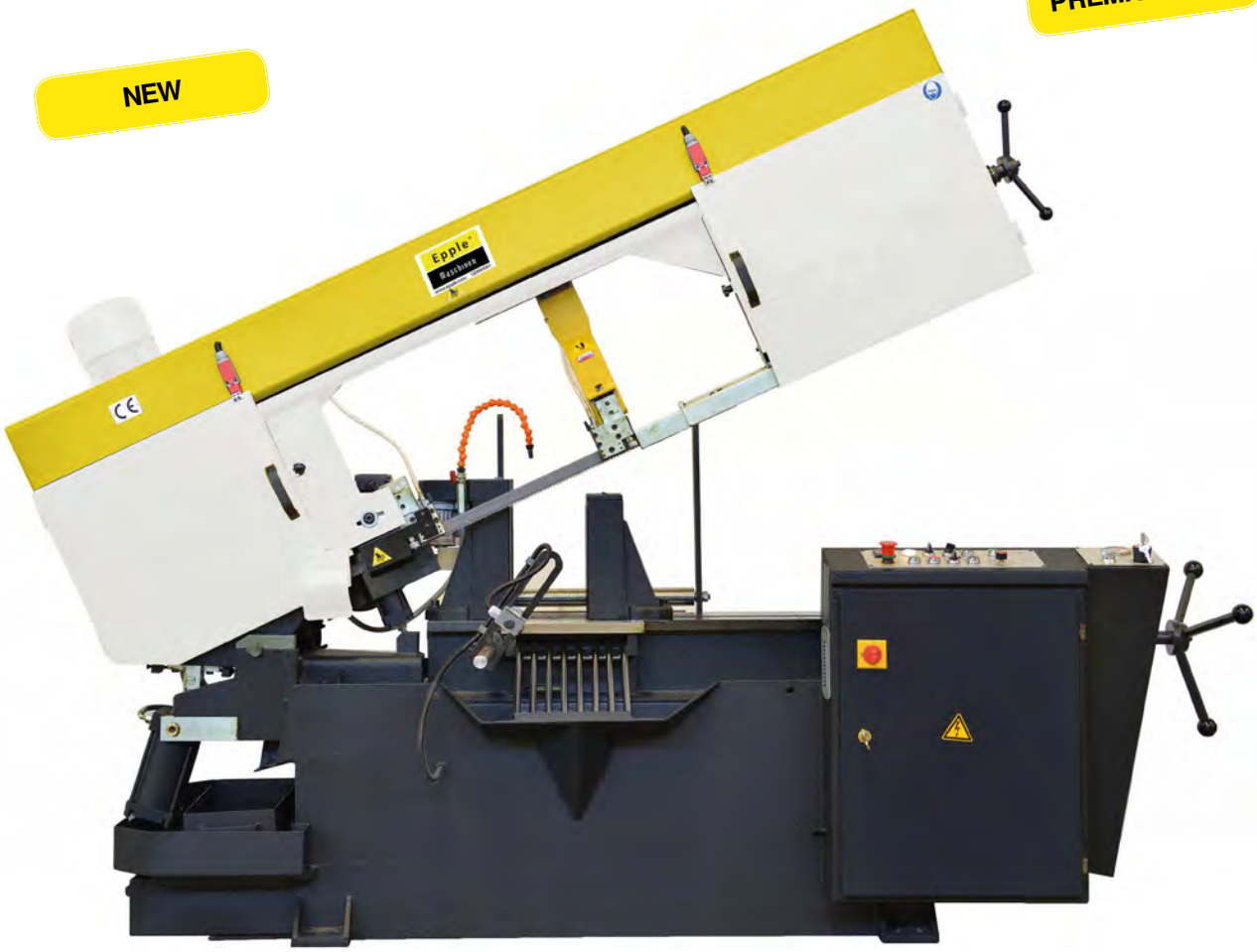

Description	E-BS 440 V
cutting capacity circular	440 mm
cutting capacity flat	580 x 440 mm
cutting capacity rectangular	440 mm
motor power main driver	3 kW
power of the hydraulic pump	0,55 kW
motor power of the coolant pump	0,12 kW
band speed, stepless	20 - 100 m/min
saw band dimensions	5.200 x 34 x 1,1 mm
height of the working surface	735 mm
height	1.710 mm
length	2.630 mm
depth	1.110 mm
weight	1.140 kg

	E-BS 440 V
EAN	**4260364296082**
Item No.	**330 2441**

You can find detailed equipment at page 259.

E-BS 440 V

» fully automatic band saw for sawing thick-walled solid material, pipes and other profiles
» roller feed of the material the front "tensioning rollers" are driven by a worm gear by means of an electric motor
» the feed length of the material is preselected manually via an adjustable microswitch
» the number of pieces to be cut is "controlled" by a piece counter
» torsion-free welded construction with stable saw frame made of high-quality cast iron, made from one piece, guarantees smooth running, high cutting performance and long service life of the saw bands
» infinitely variable belt speed
» hydraulic mechanical tensioning
» tape guide on hard metal plates and rolls
» thermal overload protection and undervoltage release
» automatic shutdown after cutting
» infinitely variable overpressure control via hydraulic cylinder
» automatic belt breakage protection

STANDARD

OPTIONAL

E-BSP 540 GH

METAL BAND SAW

PREMIUM-LINE

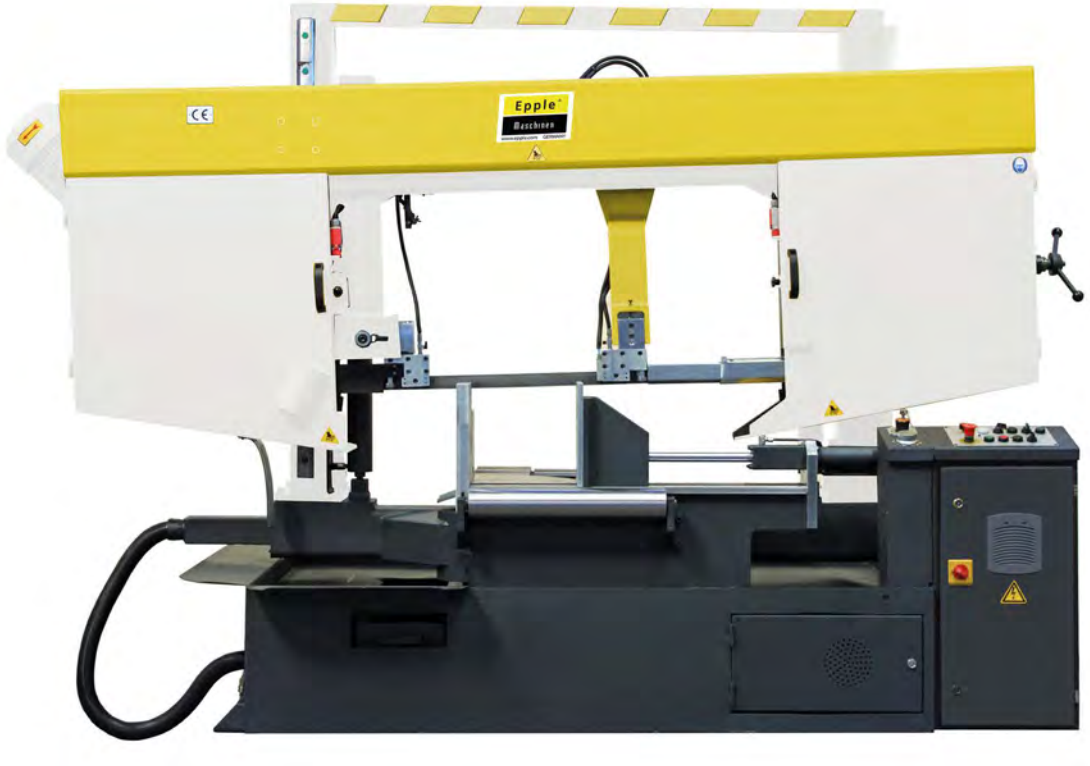

You can find detailed equipment at page 259.

Description	E-BSP 540 GH
cutting capacity 0°	circular 540 mm flat 750 x 540 mm rectangular 540 mm
mitre cut at +30°	circular 540 mm flat 600 x 540 mm rectangular 540 mm
mitre cut at +45°	circular 540 mm flat 450 x 540 mm rectangular 450 x 450 mm
mitre cut at +60°	circular 270 mm flat 250 x 540 mm rectangular 250 x 250 mm
mitre	up to +60°
cutting speed	20 - 100 m/min
saw band length	6.000 x 41 x 1,3 mm
motor power	400 V / 50 Hz / 4 kW
dimensions (L x D x H)	3.000 x 1.300 x 2.150 mm
inlet height	695 mm
weight	2.445 kg

	E-BSP 540 GH
EAN	**4260364290851**
Item No.	**330 1540**

E-BSP 540 GH

» semi-automatic machine
» mitre
» inverter standard = stepless speed adjustment 20 - 100 m/min
» hydraulic vice
» digital display for angular display
» hydraulic clamping of the saw arm, saw arm turning by hand
» saw band inclined by 3°
» automatic saw speed adaption via sensors
» synchronisation of belt guide and vice, saw bow made of solid steel
» diagonal teethed and tapered heavy duty gear
» hydraulic vice clamping over the entire clamping range
» large cutting width up to 750 mm
» hydromechanic tape tension readable via manometer
» mobile control panel
» high quality hydraulic components
» driven chip brush
» fundament and arm are massive welded constructions
» vertical movement with high-precision linear guides

STANDARD

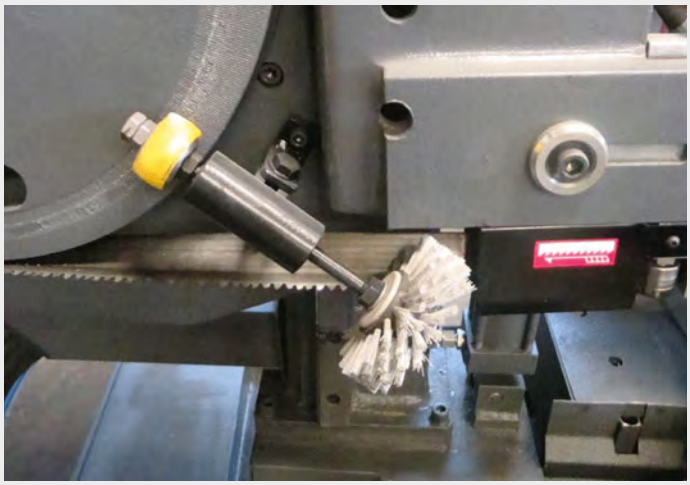

OPTIONAL

micro cooling system

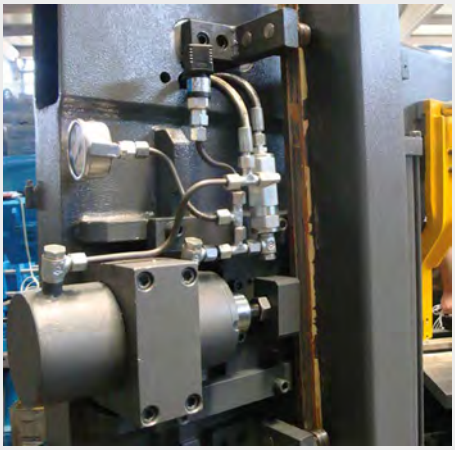

hydraulic blade tensioning

E-BSP 560 DGH

METAL BAND SAW

PREMIUM-LINE

Desciption	E-BSP 560 DGH
cutting capacity 0°	circular 560 mm flat 820 x 540 mm rectangular 540 mm
mitre cut at -30°	circular 500 mm flat 705 x 540 mm rectangular 540 mm
mitre cut at -45°	circular 550 mm flat 550 x 540 mm rectangular 540 mm
mitre cut at +60°	circular 360 mm flat 360 x 540 mm rectangular 360 mm
mitre cut at +30°	circular 560 mm flat 705 x 540 mm rectangular 540 mm
mitre cut at +45°	circular 550 mm flat 550 x 540 mm rectangular 540 mm
mitre	+60° up to -45°
cutting speed	20 - 100 m/min
saw band length	6.800 x 41 x 1,3 mm
motor power	400 V / 50 Hz / 4 kW
dimensions (L x D x H)	3.800 x 1.750 x 2.350 mm
inlet height	880 mm
weight	3.200 kg

	E-BSP 560 DGH
EAN	**4260364294361**
Item No.	**330 1560**

Metal Band Saw

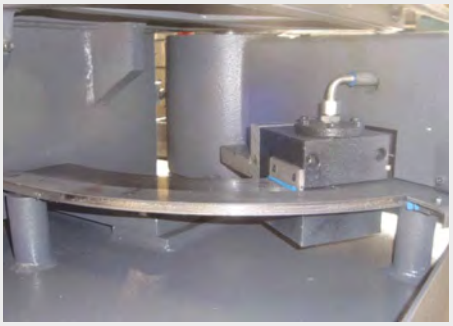

E-BSP 560 DGH

» semi-automatic machine
» mitre
» inverter standard = stepless speed adjustment 20 - 100 m/min
» hydraulic vice
» digital display for angular display
» hydraulic clamping of the saw arm, saw arm turning by hand
» saw band inclined by 3°
» automatic saw speed adaption via sensors
» synchronisation of belt guide and vice, saw bow made of solid steel
» diagonal teethed and tapered heavy duty gear
» hydraulic vice clamping over the entire clamping range
» large cutting width up to 750 mm
» hydromechanic tape tension readable via manometer
» mobile control panel
» high quality hydraulic components
» driven chip brush
» fundament and arm are massive welded constructions
» vertical movement with high-precision linear guides

OPTIONAL

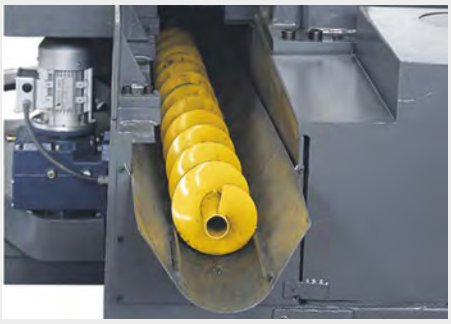

You can find detailed equipment at page 259.

E-BSP 570 CNC

METAL BAND SAW

PREMIUM-LINE

Metal Band Saw

E-BSP 570 CNC

The new E-BSP 570 CNC was developed to maximize the production of heavy metals, profiles and tubes in large series with a fully automatic servo feeding and cutting system for our customers.
Automatic controls and sensors maximize the performance / cost ratio and extend blade life by up to 50%.

Description	E-BSP 570 CNC
cutting capacity	circular 570 mm flat 600 x 570 mm rectangular 570 mm
hydraulic pump	2,2 kW
hydraulic pump motor	0,2 kW
chip conveyor	0,37 kW
servomotor power supply	2 kW
cutting speed	20 - 100 m/min
saw blade length	7.400 x 54 x 1,6 mm
motor power	400 V / 50 Hz / 7,5 kW
dimensions (L x D x H)	3.500 x 2.000 x 2.700 mm
inlet height	805 mm
weight	5.900 kg

	E-BSP 570 CNC
EAN	**4260364297355**
Item No.	**330 2570**

E-BSP 570 CNC

» intelligent cutting and user-friendly touch screen with Omron CNC cutting program
» ability to store up to 50 different cutting lengths in 100 different programs
» cutting-parameter are CNC-controlled for optimal processing of the workpiece
» manual input of cutting parameters
» servo feeding with 700 mm stroke
» the guide arm moves on a linear guideway and moves in coordination with the movable vice jaw
» hydraulically operated carbide blade guides
» motion detector and automatic deflection sensor
» vibration-free cutting with 3 linear paths
» motorized chip brush
» planetary gear

STANDARD

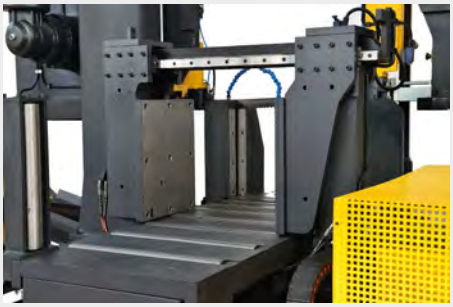

OPTIONAL

» Hydraulic Top-Clamping
» 15 kW Motor

Hexagonal vice for bundling pipes

Microspray-coolant system

You can find detailed equipment at page 259.

E-BSP 650 DGH NC

METAL BAND SAW

PREMIUM-LINE

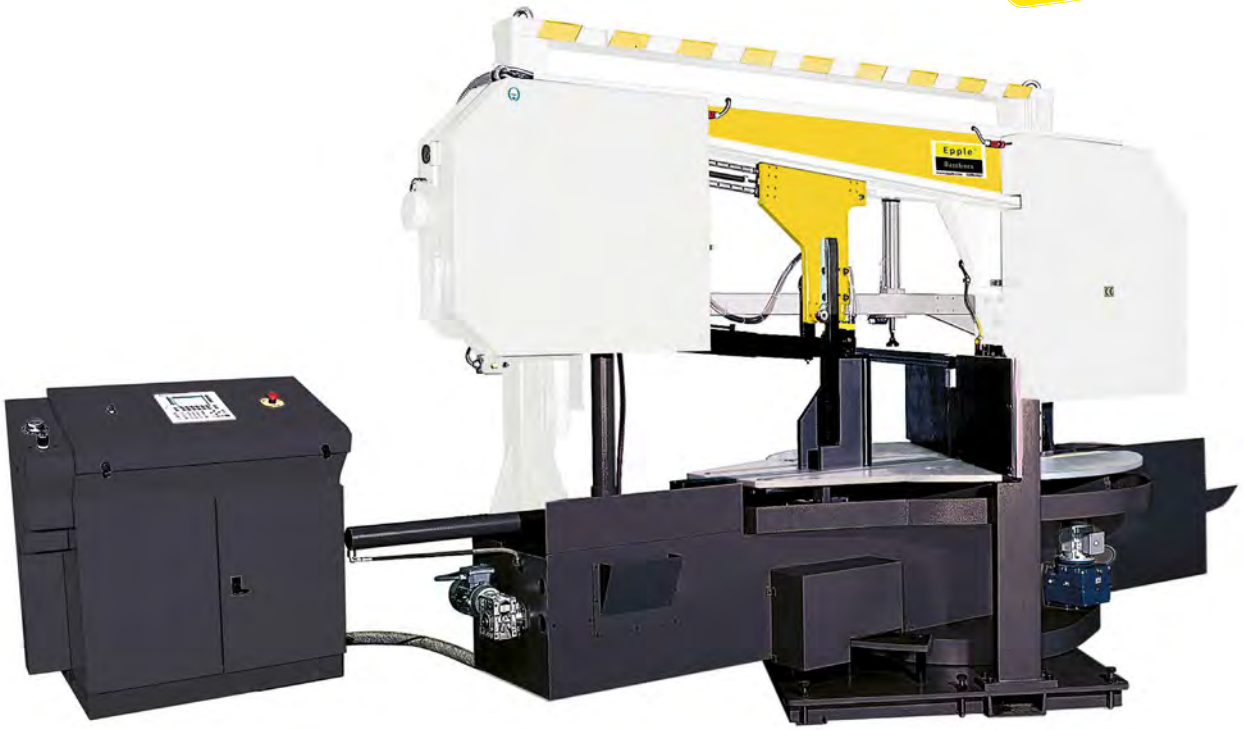

Description	E-BSP 650 DGH NC
cutting capacity 0°	circular 650 mm flat 1.000 x 600 mm rectangular 600 x 600 mm
mitre cut at +30° / -30°	circular 650 mm flat 840 x 600 mm rectangular 600 x 600 mm
mitre cut at +45° / -45°	circular 650 mm flat 660 x 600 mm rectangular 600 x 600 mm
mitre cut at 60°	circular 440 mm flat 440 x 600 mm rectangular 440 x 440 mm
mitre	from -30° up to +60°
cutting speed	20 - 100 m/min
saw band length	8.400 x 54 x 1,6 mm
motor power	400 V / 50 Hz / 7,5 kW
dimensions (L x D x H)	4.750 x 1.970 x 2.630 mm
inlet height	880 mm
weight	6.520 kg

	E-BSP 650 DGH-NC
EAN	**4260364290868**
Item No.	**330 5650**

E-BSP 650 DGH NC

» semi-automatic machine
» double mitre
» inverter equipped: stepless speed adjustment 20 - 100 m/min
» hydraulic vice
» hydraulic strip clamping
» arm swivel NC-controlled from -45° to +60°
» saw band inclined by 5°
» stepless adjustable lowering speed
» motor driven chip conveyor
» motor driven chip brush
» rapid sensor controlled positioning of the saw bow to the material
» synchronization of the band guide and the vice
» slant toothed, conical heavy duty gearbox
» large cutting width up to 1.000 mm
» saw bow made of solid steel
» high-quality hydraulic components
» profile rail in linear technique for precise adjustments

STANDARD

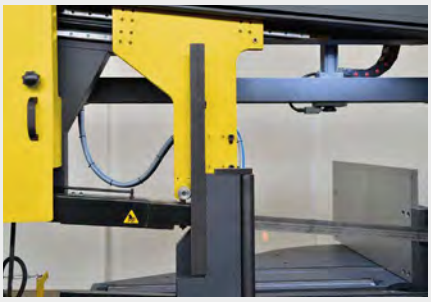
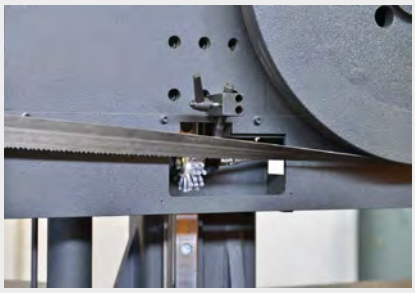

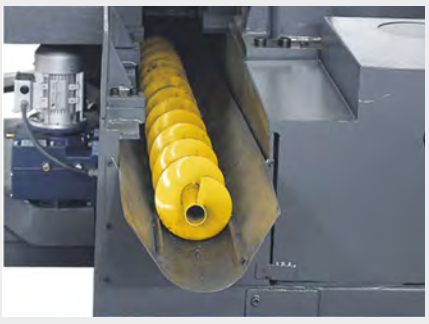

OPTIONAL

You can find detailed equipment at page 259.

E-BSP 810 GH

METAL BAND SAW

PREMIUM-LINE

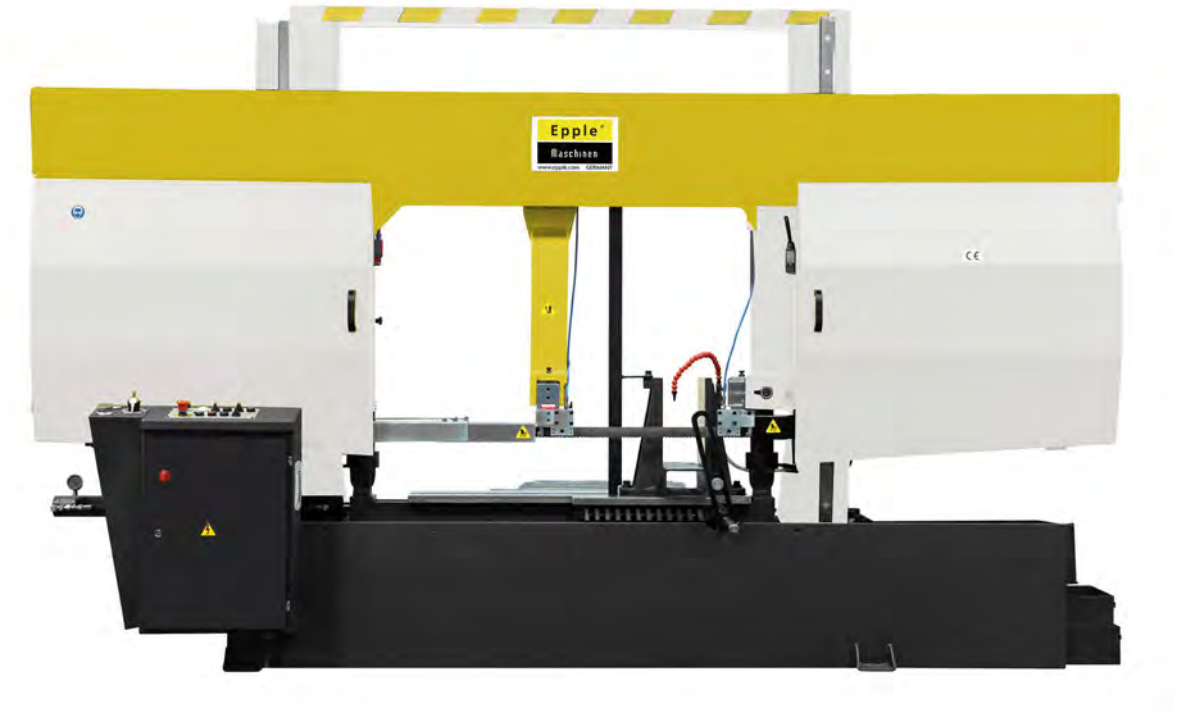

E-BSP 810 GH

- » semi-automatic machine
- » mitre
- » inverter equipped: stepless driving speed adjustment 20 - 100 m/min
- » hydraulic vice
- » digital readout for angle display
- » hydraulic clamping of the saw arm, manual turning of saw arm
- » saw band inlined for 3°
- » automatic saw speed adaption by sensors
- » synchronization of strip guide and vice, saw bow made of solid steel
- » slant toothed, conical heavy duty gearbox
- » hydraulic strip clamping
- » large cutting width up to 810 mm
- » hydromechanical tape tension readable via manometer
- » high-quality hydraulic components
- » powered chip brush
- » stand and arm made of heavy welded construction
- » vertical movement with high-precision linear guides

Description	E-BSP 810 GH
cutting capacity 0°	circular 810 mm flat 750 x 910 mm rectangular 750 mm
mitre cut at +30°	circular 760 mm flat 740 x 750 mm rectangular 740 mm
mitre cut at +45°	circular 600 mm flat 750 x 600 mm rectangular 600 mm
mitre cut at +60°	circular 360 mm flat 750 x 360 mm rectangular 360 mm
mitre	up to +60°
cutting speed	20 - 100 m/min
saw band length	8.200 x 41 x 1,3 mm
motor power	400 V / 50 Hz / 4 kW
dimensions (L x D x H)	4.020 x 1.630 x 2.450 mm
inlet height	725 mm
weight	3.970 kg

	E-BSP 810 GH
EAN	**4260364290875**
Item No.	**330 1810**

E-BSP 820 H

METAL BAND SAW

NEW

PREMIUM-LINE

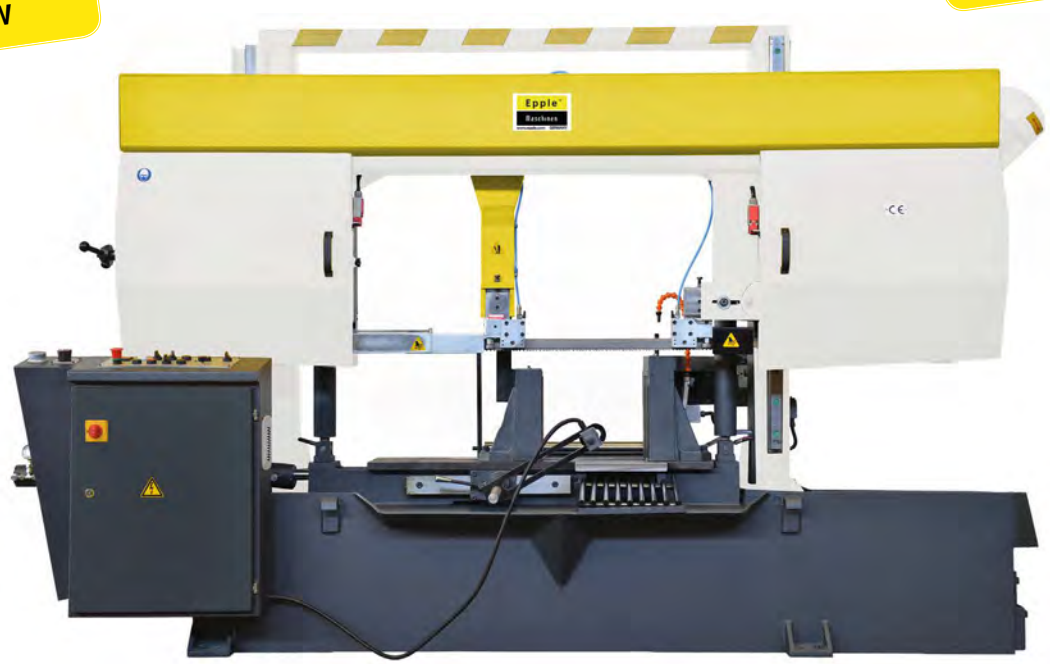

The **E-BSP 820 H** is a semi-automatic machine in two-column construction, which is ideally suited for cutting full material as well as pipes, profiles and girders in steel cutting with its middle cutting range (round to 820 mm, flat 820 x 800 mm). Only 90° cuts are possible with this machine.
Precision hard metal saw blade guides as well as a sturdy, rigid construction of the machine ensure a precise cut.
The basic equipment of this machine includes a full stroke lifting cylinder, a continuously adjustable belt speed.
The saw blade runs over a large drive and deflection wheel which ensures a longest possible service life.

You can find detailed equipment at page 259.

Description	E-BSP 820 H
cutting capacity circular	820 mm
cutting capacity flat	850 x 820 mm
cutting capacity rectangular	820 x 820 mm
motor power main driver	7,5 kW
power of the hydraulic pump	1,5 kW
motor power of the coolant pump	0,12 kW
band speed, stepless	20 - 100 m/min
saw band dimensions	8.200 x 54 x 1,6 mm
height of the working surface	585 mm
weight	3.424 kg
length	3.900 mm
depth	1.200 mm
height	3.424 mm

	E-BSP 820 H
EAN	**4260364296099**
Item No.	**330 1820**

E-BSP 1.020 H

METAL BAND SAW

NEW

PREMIUM-LINE

Description	E-BSP 1.020 H
cutting capacity 0°	circular 1.020 mm flat 1.020 x 1.020 mm rectangular 1.020 mm
mitre cut at +45°	circular 675 mm flat 675 x 1.020 mm rectangular 675 mm
mitre	up to +45°
cutting speed	20 - 100 m/min
saw band length	9.500 x 54 x 1,6 mm
motor power	400 V / 50 Hz / 7,5 kW
dimensions (L x D x H)	4.500 x 1.700 x 2.750 mm
inlet height	535 mm
weight	5.860 kg

	E-BSP 1.020 H
EAN	**4260364294378**
Item No.	**330 1020**

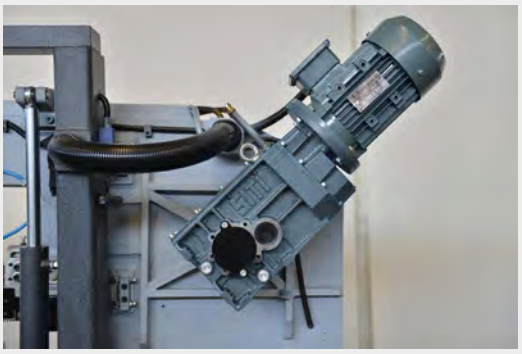

PIC.: BEVEL-GEAR

E-BSP 1.020 H

STANDARD EQUIPMENT

» inverter
» hydraulic saw band tension
» pressure adjustable
» optical height adjustment
» material transport rollers front/rear

PIC.: CONTROL PANEL

OPTIONAL EQUIPMENT

» chip conveyor
» micro lubrication system
» 3 m Material roll table
» 3 m motorized roller table

E-BSP 1.020 H

» hydraulic vice
» digital display for angle display
» substructure and arm heavy welding construction
» synchronization of tape guide and vice
» sawframe made of solid steel
» mobile control panel
» high-quality hydraulic components

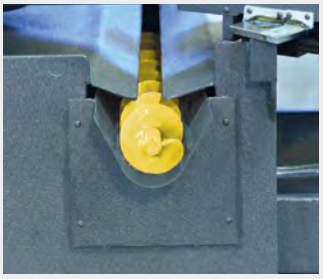

PIC.: OPTIONAL:
CHIP CONVEYOR

PIC.: BACKSIDE OF E-BSP 1.020 H

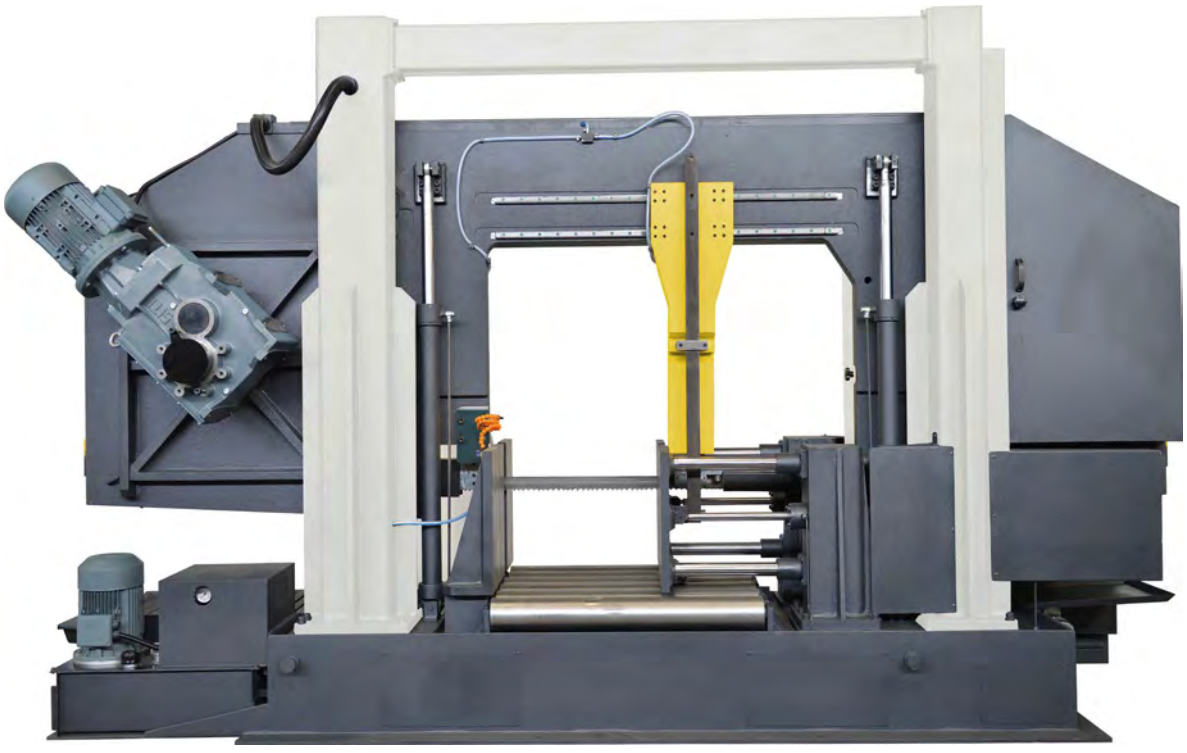

E-BSP 1.110 H / E-BSP 1.110 HL

METAL BAND SAWS

NEU

PREMIUM-LINE

PIC.: E-BSP 1.110 H

Description	E-BSP 1.110 H	E-BSP 1.110 HL
cutting capacity circular	1.110 mm	1.110 mm
cutting capacity flat	1.110 x 1.110 mm	1.110 x 1.300 mm
cutting capacity rectangular	1.110 mm	1.110 mm
motor power main driver	11 kW	11 kW
power of the hydraulic pump	4 kW	7,5 kW
motor power of the coolant pump	0,2 kW	0,2 kW
band speed, stepless	20 - 100 m/min	20 - 100 m/min
saw band dimensions	10.500 x 67 x 1,6 mm	10.900 x 67 x 1,6 mm
height of the working surface	545 mm	545 mm
height	2.975 mm	2.975 mm
length	4.800 mm	5.300 mm
width	1.500 mm	1.500 mm
weight	10.440 kg	11.390 kg

	E-BSP 1.110 H	E-BSP 1.110 HL
EAN	**4260364296105**	**4260364296112**
Item No.	**330 1110**	**330 1113**

The **E-BSP 1.110 H and E-BSP 1.110 HL** are semi-automatic machines in two-column construction, which are ideal for cutting solid material as well as pipes, profiles and beams in the middle section (up to 1.110 mm, flat 1.110 x 1.110 mm or 1.300 x 1.110 mm) steel cutting is suitable. With this machine are only 90° cuts possible. Precision hard metal saw blade guides as well as a sturdy, rigid construction of the machine ensure a precise cut. The basic equipment of this machine includes a full stroke lifting cylinder, a continuously adjustable belt speed. The saw blade runs over a large drive and deflection wheel which ensures a longest possible service life.

STANDARD

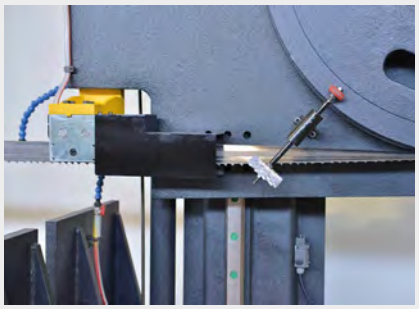
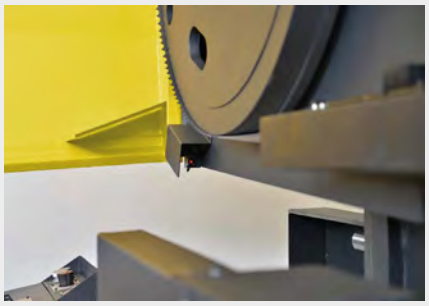

OPTIONAL

E-BSP 1.313 H / E-BSP 1.515 H

METAL BAND SAWS

PREMIUM-LINE

Metal Band Saw

Description	E-BSP 1.313 H	E-BSP 1.515 H
cutting capacity circular	1.300 mm	1.500 mm
cutting capacity flat	1.300 x 1.300 mm	1.510 x 1.500 mm
cutting capacity rectangular	1.300 mm	1.500 mm
motor power main driver	11 kW	15 kW
power of the hydraulic pump	7,5 kW	7,5 kW
motor power of the coolant pump	0,2 kW	2 x 0,2 kW
band speed, stepless	20 - 100 m/min	10 - 70 m/min
saw band dimensions	12.100 x 67 x 1,6 mm	13.300 x 80 x 1,6 mm
height of the working surface	545 mm	545 mm
height	3.175 mm	4.055 mm
length	5.300 mm	6.400 mm
depth	1.500 mm	2.250 mm
weight	11.500 kg	25.320 kg

	E-BSP 1.313 H	E-BSP 1.515 H
EAN	**4260364296129**	**4260364296136**
Item No.	**330 1300**	**330 1515**

E-BSP 1.313 H and E-BSP 1.515 H are semi-automatic machines in two-column construction, which is ideally suited for cutting full material as well as pipes, profiles and beams in steel cutting with its cutting range (**E-BSP 1.313 H**: circular up to 1.300 mm, flat 1.300 x 1.300 mm; **E-BSP 1.515 H**: circular up to 1.500 mm, flat 1.510 x 1.500 mm).
Precision hard metal saw blade guides as well as sturdy, rigid construction of the machine ensure a precise cut.
The basic machine includes a full stroke lifting cylinder, a continuously adjustable belt speed. The saw blade runs over a large drive and deflection wheel which ensures a longest possible service life.
The band speed is stepless adjustable.

STANDARD

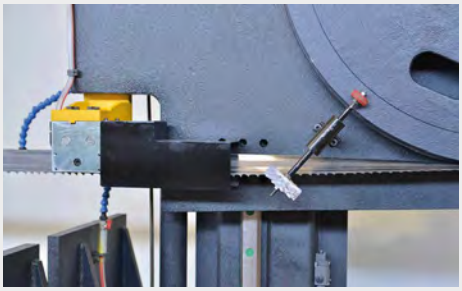
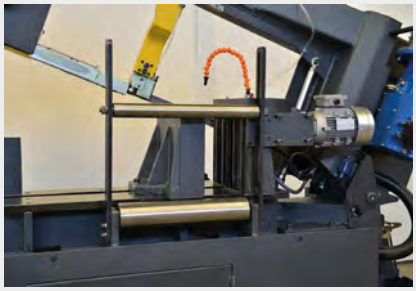

OPTIONAL

KKS 315 L / KKS 315 SA

CIRCULAR COLD SAWS

PIC.: KKS 315 L

PIC.: head for slitting 90° pivoted

PIC.: KKS 315 SA

KKS 315 L / KKS 315 SA

» 2-step motor
» electric coolant pump
» gear head for slitting pivoting 90° to the right (see small illustration) and 30° to the left
» automatically opening safety saw blade protection cover
» vice with parallel tensioning and four separately adjustable vice jaws
» vice jaws horizontally adjustable for the best possible material clamping during mitre cuts
» base with integrated coolant device

OPTIONAL EQUIPMENT

» coolant emulsion

Description	KKS 315 L	KKS 315 SA
blade size	max. 315 mm	max. 315 mm
saw blade hole	40 mm	40 mm
head rotation	90° right, 30° left	±90°
cutting range at 90° circular	100 mm	70 mm
cutting range at 90° square	100 x 100 mm	90 x 80 mm
cutting range at 90° rect.	140 x 90 mm	70 x 70 mm
cutting range at 45° circular	90 mm	70 mm
cutting range at 45° square	90 x 90 mm	70 x 70 mm
cutting range at 45° rect.	100 x 90 mm	80 x 70 mm
vice opened	145 mm	140 mm
speed	18 / 36 min^{-1}	19 / 38 min^{-1}
motor power	400 V / 50 Hz 750 Watt / 1,3 kW	400 V / 50 Hz 750 Watt / 1,5 kW
dimensions (L x D x H)	800 x 550 x 1.700 mm	905 x 550 x 1.350 mm
inlet height	970 mm	930 mm
weight	227 kg	270 kg

	KKS 315 L	KKS 315 SA
EAN	**4260364290882**	**4260364290899**
Item No.	**240 1315**	**240 2315**

E-MKS 315 / E-MKS 315 P / E-MKS 315 SA NC

METAL CIRCULAR SAW

NEW

PREMIUM-LINE

E-MKS 315 (MANUAL MACHINE)
E-MKS 315 P (MANUAL MACHINE WITH PNEUMATIC VICE)
E-MKS 315 SA NC (SEMI-AUTOMATIC MACHINE WITH PNEUMATIC VICE)

» 2-step motor
» drive 400 V, 50 Hz
» activation 24 V
» gearhead can be swivelled by ±45°
» automatically opening safety saw blade protective hood
» substructure
» microspray device (E-MKS 315 SA NC)

OPTIONAL EQUIPMENT

» speed range lower
» coolant emulsion
» coolant system with tank
» concentrate for coolant system
» roller conveyor
» saw blades

PIC.: E-MKS 315 SA

Description	E-MKS 315	E-MKS 315 P	E-MKS 315 SA NC
blade size	315 mm	315 mm	315 mm
saw blade hole	32 mm	32 mm	32 mm
head rotation	±45°	±45°	±45°
cutting range at 0° circular	105 mm	105 mm	105 mm
cutting range at 0° square	85 x 85 mm	85 x 85 mm	85 x 85 mm
cutting range at 0° rect.	120 x 70	120 x 70	120 x 70
cutting range at 45° circular	90 mm	90 mm	90 mm
cutting range at 45° square	80 x 80 mm	80 x 80 mm	80 x 80 mm
cutting range at 45° rect.	90 x 60 mm	90 x 60 mm	90 x 60 mm
vice opened	120 mm	120 mm	120 mm
speed	45 / 90 min^{-1}	45 / 90 min^{-1}	45 / 90 min^{-1}
motor power	1,5 / 1,9 kW	1,5 / 1,9 kW	1,5 / 1,9 kW
dimensions (L x D x H)	700 x 1.200 x 1.350 mm	700 x 1.200 x 1.350 mm	700 x 1.200 x 1.350 mm
inlet height	1.200 mm	1.200 mm	1.200 mm
weight	190 kg	190 kg	210 kg
	E-MKS 315	**E-MKS 315 P**	**E-MKS 315 SA NC**
EAN	**4260364298246**	**4260364298253**	**4260364298260**
Item No.	**340 1315**	**340 3315**	**340 2315**

E-KKS 350 V

FULLY AUTOMATIC CIRCLE SAW

NEW

PREMIUM-LINE

For technical data check page 121.

E-KKS 350 V

» sawing head with very stable vertical guide, prevents vibration of the saw blade
» stepless vertical feed 20 - 100 m/min
» material guidance by servo motor,
infeed accuracy +/-0,05 bis 0,1 mm (per stroke)
» transmission design for maximum service life sawing
» material feed is designed for slight parallelism to compensate
» intuitive and user-friendly operation with touch screen
» possibility to program several cutting lengths per part
» safety covers for maximum operator protection and comfort

Saw blade not included.

E-KKS 350 V

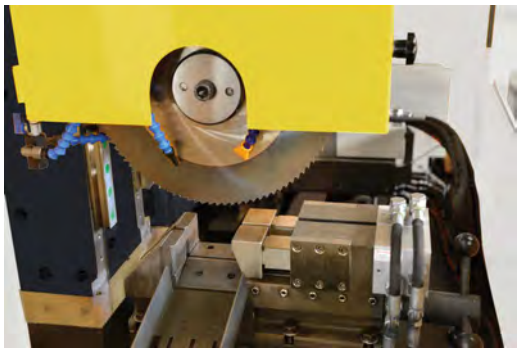

CUTTING EXAMPLES

» diameter 50 mm, length 100 mm, cycle period 20 sec
» diameter 75 mm, length 50 mm, cycle period 31 sec

OPTIONAL EQUIPMENT

» chip conveyor

TECHNICAL DATA

Description	E-KKS 350 V
cutting capacity circular	20 - 80 mm
vice opened	max. 85 mm
max. material feed path	500 mm
saw blade speed	20 - 100 m/min
blade size	260 - 350 mm
working height	900 mm
motor power	5,5 kW
servomotor feed	1,0 kW
dimensions (L x D x H)	1.700 x 1.600 x 2.170 mm
weight	1.425 kg

	E-KKS 350 V
EAN	**4260364296174**
Item No.	**340 2350**

AKS 400

ALUMINUM CIRCULAR SAW

AKS 400

» semi-automatic cutting machine for cutting of aluminum and aluminum alloys: solid material and profiles
» stable and strong construction
» simple and easy operation
» precise cut
» rotating saw head 60° to the left and 45° to the right
» 2 pneumatic quick action vices with PTFE coated jaws

PIC.: WITH ROLLER CONVEYOR LEFT AND RIGHT OPTIONAL

Description	AKS 400
blade size	420 x 30 mm
head rotation	-60° up to +45°
cutting range at 90° circular	90 mm
cutting range at 90° square	120 x 120 mm
cutting range at 90° rectangular	200 x 110 mm
cutting range at 45° circular	80 mm
cutting range at 45° square	110 x 110 mm
cutting range at 45° rectangular	150 x 100 mm
speed	3.000 min^{-1}
motor power	400 V / 50 Hz / 2,2 kW
dimensions (L x D x H)	1.200 x 970 x 1.500 mm
weight	275 kg

	AKS 400
EAN	**4260364290929**
Item No.	**241 0400**

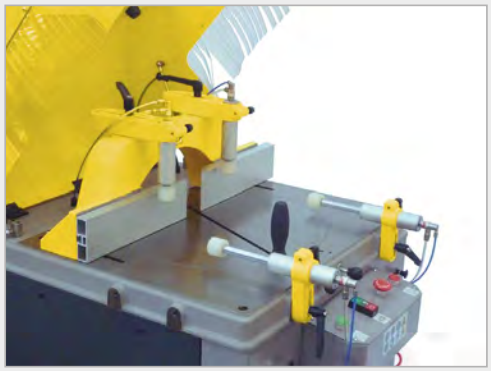

	Roller Conveyor for AKS 400 left / right
EAN	**4260364297300**
Item No.	**532 0403**

E- UAKS 400 / E-UAKS 450 / E-UAKS 550

ALUMINUM CIRCULAR SAW

NEW

PREMIUM-LINE

E-UAKS 450 / E-UAKS 550

» Semi-automatic machine for the cutting of solid material and profiles in alumnum and light alloys
» stable and strong construction
» simple and easy operation
» precise cut
» mitre in both directions
» 2 pneumatic quick action vices with PTFE coated jaws

OPTIONAL VERSION

sensitive cut regulation
(Model **E-UAKS 450 SR** and **E-UAKS 550 SR**) on request.

PIC.: E-UAKS 450

Description	E-UAKS 400	E-UAKS 450	E-UAKS 550
blade size	400 x 32 mm	450 x 32 mm	550 x 32 mm
head rotation	-45° up to +45°	-45° up to +45°	-45° up to +45°
cutting range at 90° circular	110 mm	115 mm	155 mm
cutting range at 90° square	110 x 110 mm	115 x 115 mm	155 x 155 mm
cutting range at 90° rectangular	110 x 110 mm	115 x 155 mm	180 x 155 mm
cutting range at 45° circular	130 mm	90 mm	130 mm
cutting range at 45° square	130 x 130 mm	90 x 90 mm	130 x 130 mm
cutting range at 45° rectangular	80 x 110 mm	105 x 115 mm	130 x 140 mm
speed	3.000 min^{-1}	3.000 min^{-1}	3.000 min^{-1}
motor power	400 V / 50 Hz / 3 kW	400 V / 50 Hz / 2,2 kW	400 V / 50 Hz / 3 kW
dimensions (L x D x H)	980 x 1.130 x 1.430 mm	850 x 970 x 1.370 mm	980 x 1.130 x 1.430 mm
weight	220 kg	180 kg	220 kg
	E-UAKS 400	**E-UAKS 450**	**E-UAKS 550**
EAN	**4260364298284**	**4260364298536**	**4260364298543**
Item No.	**340 0400**	**340 0450**	**340 0550**

Saw blade not included.

E-AKS-F 350 / E-AKS-F 400

ALUMINUM CIRCULAR SAW WITH VERTICAL GUIDANCE OF THE SAW HEAD

NEW

PREMIUM-LINE

E-AKS-F 350 / E-AKS-F 400

» semi-automatic vertical circular saw
» hardened vertical guides
» hydropneumatic feed for even saw cut
» foot pedal
» saw head with heavy-duty worm gearbox
» stepless speed adjustment
(only Model E-AKS-F 400)
» mitre setting from -45° up to +60°
» with coolant device and chip container

OPTIONAL EQUIPMENT

» roller block
» roller conveyor
» saw blade

Description	E-AKS-F 350	E-AKS-F 400
saw blade diameter	350 mm	400 mm
saw blade bore	32 mm	40/50 mm
cutting capacity 90° circular	110 mm	120 mm
cutting capacity 90° square	90 x 90 mm	110 x 110 mm
cutting capacity 90° rectangular	160 x 90 mm	160 x 90 mm
cutting capacity 45° circular	110 mm	120 mm
cutting capacity 45° square	90 x 90 mm	100 x 100 mm
cutting capacity 45° rectangular	120 x 80 mm	120 x 90 mm
cutting capacity 60° circular	90 mm	90 mm
cutting capacity 60° square	80 x 80 mm	90 x 90 mm
cutting capacity 60° rectangular	80 x 80 mm	90 x 90 mm
speeds	36 / 72 min^{-1}	20 - 70 min^{-1}
motor power	400 V / 50 Hz / 3,1 kW	400 V / 50 Hz / 3,1 kW
dimensions (L x D x H)	1.000 x 80 x 1.800 mm	1.202 x 1.085 x 1.758 mm
weight	480 kg	540 kg
	E-AKS-F 350	**E-AKS-F 400**
EAN	**4260364298505**	**4260364298512**
Item No.	**340 1350**	**340 1400**

Saw blade is not included in scope of delivery.

E-AKS 315 NC

ALUMINUM CIRCULAR SAW WITH AUTOMATIC MATERIAL FEED AND PLC-CONTROL

NEW

PREMIUM-LINE

E-KS 315 NC

» machine for straight saw cuts with servo-controlled material feed
» hydropneumatic saw cut
» two speeds
» PLC-control
» coloured touch screen
» up to four cutting lengths per part
» cut positioning ± 0,3 mm
» coolant tank and pump included

OPTIONAL EQUIPMENT

» roller block
» saw blade

Description	E-AKS 315 NC
saw blade diameter	315 mm
saw blade bore	32 mm
cutting capacity 90° circular	100 mm
cutting capacity 90° square	80 x 80 mm
cutting capacity 90° rectangular	110 x 80 mm
cutting capacity 45° circular	-
cutting capacity 45° square	-
cutting capacity 45° rectangular	-
cutting capacity 60° circular	-
cutting capacity 60° square	-
cutting capacity 60° rectangular	-
speeds	40 / 80 min^{-1}
motor power	400 V / 50 Hz / 3 kW
dimensions (L x D x H)	1.900 x 1.350 x 1.400 mm
weight	620 kg

	E-AKS 315 NC
EAN	**4260364298529**
Item No.	**340 0315**

Saw blade is not included in scope of delivery.

E-AKS 2L-420 / E-AKS 2L-450 / E-AKS 2L-500

DOUBLE MITRE ALUMINUM CIRCULAR SAW

NEW

PREMIUM-LINE

PIC.: E-AKS 2L-450

Universal aluminum circular sawing machine with two mitre joint working heads. Aluminum or plastic profiles cannot only be sawn to length, but also mitred on both sides at the same time.

Delivery without saw blade.
Saw blades must be ordered according to application.
If required, we´re happy to advise you.

E-AKS 2L-420 / E-AKS 2L-450 / E-AKS 2L-500

Double mitre saws are used for cutting plastic or aluminum profiles to length and mitre cutting at the same time. Two mitre saws are mounted on a stable substructure, the distance between is adjustable.
The profiles can be clamped pneumatically.

Description	E-AKS 2L-420	E-AKS 2L-450	E-AKS 2L-500
blade size	420 x 32 x 4 mm	450 x 32 x 4 mm	500 x 32 x 4 mm
head rotation	-45° up to +45°	-45° up to +45°	-45° up to +45°
cutting range at 90° circular	100 mm	135 mm	135 mm / 150 mm
cutting range at 90° square	100 x 100 mm	135 x 135 mm	135 x 135 mm / 150 x 150 mm
cutting range at 90° rectangular	100 x 160 mm	100 x 200 mm	100 x 200 mm / 100 x 220 mm
cutting range at 45° circular	100 mm	120 mm	120 mm / 130 mm
cutting range at 45° square	100 x 100 mm	120 x 120 mm	120 x 120 mm / 130 x 130 mm
cutting range at 45° rectangular	110 x 100 mm	100 x 140 mm	100 x 140 mm / 100 x 160 mm
workpiece length	630 - 5.000 mm	630 - 5.000 mm	630 - 5.000 mm
speed	3.000 min^{-1}	3.000 min^{-1}	3.000 min^{-1}
motor power	400 V / 50 Hz / 1,5 kW	400 V / 50 Hz / 2,2 kW	400 V / 50 Hz / 2,2 kW
dimensions (L x D x H)	4.100 x 1.680 x 1.170 mm	4.000 x 1.720 x 1.250 mm	4.000 x 1.720 x 1.250 mm
weight	680 kg	800 kg	800 kg

	E-AKS 2L-420	E-AKS 2L-450	E-AKS 2L-500
EAN	**4260364298550**	**4260364297850**	**4260364298567**
Item No.	**340 2420**	**340 2450**	**340 2500**

TM 350 / E-TM 350 PROFI

CUTTING MACHINE

PIC.: TM 350

TM 350 / E-TM 350 PROFI

» stationary cutting machine with cutting disc for solid materials and profiles
» solid and forceful construction
» easy to operate
» turnable saw head 45° to the left & right
» main switch and load protection
» control handle with security switch

OPTIONAL EQUIPMENT

» Model PROFI with extensibilities
» roller block
» roller conveyor

Description	TM 350
cut-off wheel diameter	350 mm
head rotation	±45°
cutting range at 90° circular	120 mm
cutting range at 90° square	120 x 120 mm
cutting range at 90° rectangular	80 x 120 mm
cutting range at 45° circular	105 mm
cutting range at 45° square	105 x 105 mm
cutting range at 45° rectangular	90 x 100 mm
vice opened	190 mm
speed	4.300 min^{-1}
motor power	400 V / 50 Hz / 4 kW
dimensions (L x D x H)	970 x 620 x 1.700 mm
inlet height	890 mm
weight	230 kg

	E-TM 350 PROFI
EAN	**4260364298574**
Item No.	**341 0350**

	TM 350
EAN	**4260364290912**
Item No.	**241 0350**

VBS 400 / VBS 500 / VBS 585

VERTICAL BAND SAWS

NEW

PIC.: VBS 500

- » user-friendly vertical band saw for metal
- » table swivelable -45° to the right and -15° to the left
- » infinitely variable cutting speed
- » adjustable tape guide
- » tape cutting device
- » tape welding device
- » tape grinding machine
- » LED working light

Description	VBS 400	VBS 500	VBS 585
table size	550 x 600 mm	660 x 700 mm	660 x 700 mm
space between stand + saw band	400 mm	500 mm	585 mm
max. workpiece height	285 mm	310 mm	336 mm
cutting speed	0 - 1.400 min^{-1}	0 - 1.400 min^{-1}	0 - 1.400 min^{-1}
saw band length	3.390 - 3.467 mm	3.980 - 4.050 mm	4.430 - 4.520 mm
motor power	400 V / 50 Hz / 1,5 kW	400 V / 50 Hz / 1,5 kW	400 V / 50 Hz / 1,5 kW
dimensions (L x D x H)	1.080 x 800 x 2.000 mm	1.400 x 900 x 2.200 mm	1.470 x 950 x 2.300 mm
inlet height	700 mm	700 mm	700 mm
weight	310 kg	484 kg	555 kg
	VBS 400	**VBS 500**	**VBS 585**
EAN	**4260364296143**	**4260364296150**	**4260364296167**
Item No.	**241 1400**	**241 0500**	**241 0585**

Grinding

DS 150 / DS 175 / DS 200-400 V

DOUBLE ENDED GRINDERS

PIC.: DS 175

DS 150 / DS 175 / DS 200-400 V

» solid quality double ended grinder for the professional machining of work parts of metal
» adequate for long-term work
» massive stable construction with maintenance free electro motors
» high smoothness and longevity by balanced rotor with quality ball bearings
» aluminium casting body
» protection of flying sparks by 2 makrolon covers
» adjustable and massive work part plating
» scope of supply: 2 universal aluminium oxide abrasive wheel

Description	DS 150	DS 175	DS 200-400 V
dimensions of grinding disk / bore	Ø 150 x 20, Ø 16 mm	Ø 175 x 20, Ø 32 mm	Ø 200 x 25, Ø 32 mm
speed	2.850 min^{-1}	2.850 min^{-1}	2.850 min^{-1}
motor power	230 V / 500 Watt	230 V / 500 Watt	400 V / 900 Watt
dimensions (L x D x H)	410 x 200 x 295 mm	420 x 220 x 300 mm	450 x 245 x 330 mm
weight	16 kg	18 kg	27 kg

	DS 150	DS 175	DS 200-400 V
EAN	**4260364290936**	**4260364290943**	**4260364290950**
Item No.	**226 2150**	**226 2175**	**226 2200**

ISM 250 / ISM 250 F

COMBINED GRINDING AND POLISHING MACHINE

PIC.: ISM 250

PIC.: ISM 250 F

ISM 250 / ISM 250 F

» **stepless speed adjustment** (ISM 250 F)
» fast and easy deburring and/or polishing even of complex profiles
» powerful pulling power due to powerful motor
» umplicated, tool-free grinding belt replacement
» substructure with lockable door
» tool compartment included in scope of delivery
» individually swivelling grinding arm with suction connection
» suitable for grinding, polishing and brushing metal, plastic and non-ferrous metals such as e.g.: copper, bronze, aluminum, brass, etc.

Description	ISM 250	ISM 250 F
dimensions of grinding belt right	75 x 1.500 mm	50 x 2.000 mm
dimensions grinding disc left	250 x 32 x 25 mm	250 x 50 mm
speed	1.100 / 2.300 min^{-1} (2 steps)	200 - 2.800 min^{-1} (stepless)
motor power	400 V / 50 Hz / ,1 / 1,5 kW	400 V / 50 Hz / 2,2 kW
dimensions (L x D x H)	830 x 630 x 1.280 mm	1.160 x 700 x 1.850 mm
weight	75 kg	150 kg

	ISM 250	ISM 250 F
EAN	**4260364297775**	**4260364294385**
Item No.	**225 9001**	**225 9000**

TBSM 100-2 2 BELT SPEEDS
BSM 75 / BSM 75-2 WITH 2-SPEED MOTOR
BSM 150

METAL BELT GRINDERS

PIC.: TBSM 100-2

PIC.: BSM 75-2

Description	Stand for TBSM 100-2
EAN	4260364296075
Item No.	525 0102

Description	TBSM 100-2	BSM 75	BSM 75-2	BSM 150
belt size	100 x 1.220 mm	75 x 2.000 mm	75 x 2.000 mm	150 x 2.000 mm
contact wheel	-	200 x 75 mm	200 x 75 mm	250 x 150 mm
belt speed	9,5 m/sec / 19 m/sec	34 m/sec	17 m/sec / 34 m/sec	37 m/sec
grinding rest	100 mm continous	75 mm continous	75 mm continous	150 mm continous
motor power	400 V / 50 Hz / 1,5 kW	400 V / 50 Hz / 3 kW	400 V / 50 Hz / 2,2 kW / 2,8 kW	400 V / 50 Hz / 3 kW
dimensions (W x D x H)	355 x 432 x 410 mm	450 x 1.000 x 1.100 mm	450 x 1.000 x 1.100 mm	500 x 1.000 x 1.100 mm
weight	44 kg	85 kg	107 kg	124 kg
	T BSM 100-2	**BSM 75**	**BSM 75-2**	**BSM 150**
EAN	**4260364296181**	**4260364290967**	**4260364290974**	**4260364290981**
Item No.	**225 5102**	**225 5075**	**225 6075**	**225 5150**

BSM 150-2 WITH 2-SPEED MOTOR
BSM 220

METAL GRINDERS

NEW

PIC.: BSM 150

PIC.: BSM 220

BSM 150 / BSM 150-2 / BSM 220

» 2 speed motor (BSM 150-2)
» vibration free running
» quick adjustment into horizontal / vertical position
» continuously surface grinding area by opening the cover
» quick sanding belt tension
» powerful motor
» fast tension for the grinding belt
» time-safing deburring

BSM 75 / BSM 75-2

» 2 speed motor BSM 75-2
» vibration free running
» quick adjustment into horizontal / vertical position
» Continuously surface grinding area by opening the cover
» quick sanding belt tension
» powerful motor 3 kW
» fast tension for the grinding belt
» **time-safing deburring**

Description	BSM 150-2	BSM 220
belt size	150 x 2.000 mm	220 x 2.000 mm
contact wheel	250 x 150 mm	200 x 220 mm
belt speed	18 / 37 m/s	29 m/s
grinding rest	150 mm continous	220 mm continous
motor power	400 V / 50 Hz 2,3 kW / 3 kW	400 V / 50 Hz / 3 kW
dimensions (W x D x H)	500 x 1.000 x 1.100 mm	640 x 980 x 1.030 mm
weight	124 kg	118 kg

	BSM 150-2	BSM 220
EAN	**4260364290998**	**4260364296198**
Item No.	**225 6150**	**225 5220**

KRBS 100

TUBE GRINDER

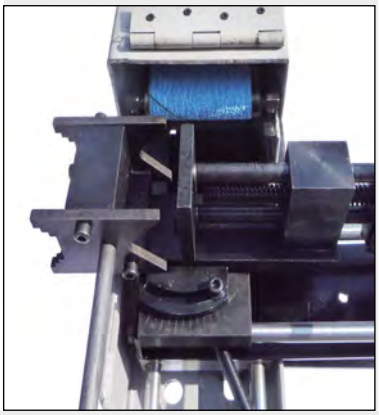

Roller Sets	Item No.
ø 20 mm	**625 6020**
ø 26 mm	**625 6026**
ø 32 mm	**625 6032**
ø 42 mm	**625 6042**
ø 48 mm	**625 6048**
ø 60 mm	**625 6060**
ø 76 mm	**625 6076**

Tube Grinding Machine

KRBS 100

» for grinding tubes and profiles on the front side, face grinding on the upper side and burring grinding on the back
» adjustable grinding angle 30°- 90°
» quick change between pipe grinding and band grinding
» a powerful clamping device guarantees excellent grinding results
» powerful motor
» nearly all adjustments accomplishable without tool
» with integrated grinding roll holder for optionally available grinding rolls with different diameters
» with pivotable protection glass
» tool for maintenance included in scope of delivery
» with two chip trays
» integrated connecting piece for metal exhausters
» including AS 1.600 Ø 100 mm
» easily removeable chip trays

Scope of delivery KRBS 100:
» 1x standard grinding band with graining K 36
» 2x chip trays
» 1x screw wrench
» 1x grinding roll

Description	KRBS 100
belt size	100 x 2.000 mm
belt speed	15 / 30 m/sec.
grindable diameter	20 - 76,1 mm
adjustable grinding angle	30° - 90°
motor power	400 V / 50 Hz / 2,8 kW
speed	1.400 / 2.800 min^{-1}
dimensions (W x D x H)	520 x 1.175 x 1.130 mm
weight	158 kg

	KRBS 100
EAN	**4260364294408**
Item No.	**225 7202**

E-KRBS 100-90 / E-KRBS 100-170

TUBE GRINDING MACHINE

PIC.: E-KRBS 100-90
CLOSED AND OPENED

E-KRBS 100-90 / E-KRBS 100-170

Conveniently operated pipe and profile grinding machine
» adjustable grinding angle up to 50°
» quick clamping device
» easy to change rollers for different grinding diameter
» standard grinding belt with grain size K36
» powerful motor

Scope of delivery:
» 1pcs. of standard grinding belt, grain size K36
» 6 pcs. of grinding belt pressure roller

Description	E-KRBS 100-90	E-KRBS 100-170
belt size	100 x 2.000 mm	100 x 2.000 mm
grindable diameter	17 - 90 mm	40 - 170 mm
adjustable grinding angle	max. 50°	max. 50°
motor power	400 V / 50 Hz / 2,2 kW	400 V / 50 Hz / 3 kW
dimensions (B x D x H)	1.150 x 600 x 1.000 mm	1.550 x 850 x 1.300 mm
weight	170 kg	350 kg
	E-KRBS 100-90	**E-KRBS 100-170**
EAN	**426036429858**	**426036429859**
Item No.	**325 9010**	**325 1710**

E-RSM 114

PIPE-GRINDING AND POLISHING MACHINE

PREMIUM-LINE

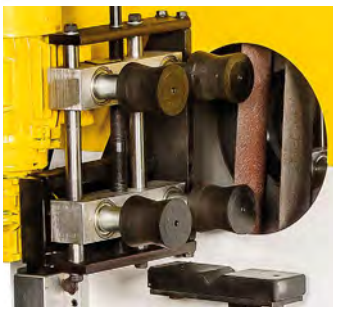

E-RSM 114

» for grinding round and square tubes as well as full material
» stepless adjustable speed of grinding belt
» two opposite running grinding belts on the rotating head, the rotation of the workpiece is not required
» connection for dust extraction
» foot pedal controlled of rotation head
» profile is stretched with wheel feed unit
» feed unit with rubber rollers ensures a safe transport of the workpiece
» uniform deburring, cleaning or polishing of tubes
» automatic feed

Description	E-RSM 114
No. of belts	2
tube diameter	10 - 114 mm
Min. tube length	355 mm
belt speed	3 - 22 m/s
belt size	940 x 50 mm
Exhaust manifold	76 mm
motor power	400 V / 4,75 kW
dimensions (W x D x H)	750 x 1.000 x 1.300 mm
weight	265 kg

	E-RSM 114
EAN	**4260364296204**
Item No.	**354 1114**

FPSM 4020 / FPSM 5025 / FPSM 6030 / FPSM 8040

NEW

FLAT- AND SURFACE GRINDING MACHINE

PIC.: FPSM 4020

PIC.: FPSM 6030

FPSM 4020 / FPSM 5025 / FPSM 6030 / FPSM 8040

Surface grinding machines with convenient operation for precise and economical workpiece machining. All models are designed for long-term continous operation, from model FPSM 5025 with longitudinal and transverse feed and automatic vertical feed.

With standard accessories grinding wheel flange, balancing mandrel, coolant container, working lamp, tool box, grinding wheel dresser without diamont, standard grinding wheel, levelling feet.

In order to grind profiles, the grinding wheel must be given a corresponding contour. There are various optional options for this. More details on request (please specify desired profile shape).

OPTIONAL EQUIPMENT

» magnetic clamping plate
» extraction device
» coolant device with filter belt
» balancing scale
» parallel dresser
» grinding wheel flange

Description	FPSM 4020	FPSM 5025	FPSM 6030	FPSM 8040
grinding length max.	470 mm	560 mm	765 mm	910 mm
grinding width max.	220 mm	275 mm	340 mm	450 mm
table size	450 x 210 mm	500 x 250 mm	635 x 305 mm	810 x 405 mm
distance: table and spindle	450 mm	450 mm	580 mm	580 mm
vertical feed	manual	automatic 6 steps	automatic 6 steps	automatic 6 steps
table feed	manual	automatic 7 - 23 m/min	automatic 7 - 23 m/min	automatic 7 - 23 m/min
grinding wheel size	200 x 31 x 13 mm	200 x 31 x 13 mm	350 x 127 x 40 mm	350 x 127 x 40 mm
spindle speeds	2.850 min^{-1}	2.850 min^{-1}	1.450 min^{-1}	1.450 min^{-1}
motor power	1,2 kW	2,2 kW	5,5 kW	5,5 kW
dimensions (L x T x H)	1.100 x 1.370 x 1.920 mm	2.250 x 2.050 x 2.130 mm	2.800 x 2.200 x 2.200 mm	3.600 x 2.400 x 2.200 mm
weight	ca. 800 kg	1.800 kg	2.800 kg	3.800 kg
	FPSM 4020	**FPSM 5025**	**FPSM 6030**	**FPSM 8040**
EAN	**4260364297669**	**4260364297676**	**4260364297683**	**4260364297690**
Item No.	**227 0402**	**227 1502**	**227 1603**	**227 1804**

E-ZB BSM 2.100

DOUBLE BELT GRINDER

PREMIUM-LINE

Double Belt Grinder

Machine for pre- and fine grinding of surfaces, compensation of unevenness, of edges and welds of flat components made of steel, stainless steel and aluminum.

Large components can be fed from the front and from the back.

Applications are e.g. doors, frames, control cabinets, housings, hoods, furniture parts, frame parts in automotive and aircraft construction, apparatus housings, lamp housings, waste containers, radiators etc.

Description	E-ZB BSM 2.100
belt size	min. 100 x 7.100 mm max. 100 x 7.200 mm
speed	0 - 3.000 min^{-1}
motor power of the main motor	400 V / 50 Hz / 4 kW
table size	2.100 x 800 mm
table elevation adjustment	600 mm
dimensions (L x D x H)	3.600 x 1.100 x 2.250 mm
weight	1.200 kg

	E-ZB BSM 2.100
EAN	**4260364294392**
Item No.	**340 5210**

E-ZB BSM 2.100

» manually adjustable table
» high job safety through closed system
» LED working light
» speed adjustment 0 - 3.000 min-1
» pneumatic control system
» rubber rolls pressure system

Pression-tools see illustrations below

Different lengths on request.

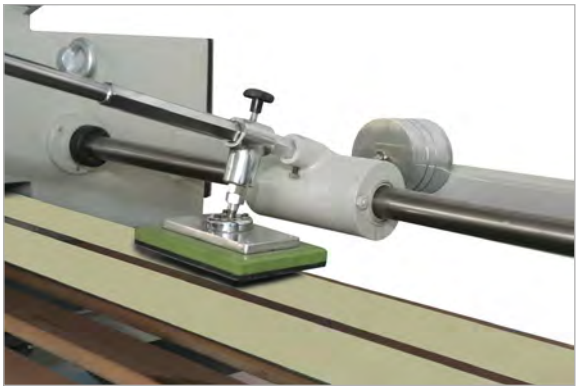

FSM 500

MANUAL SURFACE GRINDING MACHINE

NEW

Manual surface grinding machine with vertical spindle and pan grinding wheel for surface and parallel grinding. Simple, sensitive operation with swivel arm. Suitable with coolant system for wet grinding but also for dry grinding.

Machine table with T-slot for the clamping of the workpiece device.

OPTIONAL EQUIPMENT

» magnetic clamping plate
» turntable with magnet

Description	FSM 500
max distance grinding wheel - table	280 mm
grinding wheel	200 x 78 x 78 mm
spindle taper	78 mm
table size	386 x 177 mm
motor power	400 V / 50 Hz / 4,0 kW
motor speed	2.800 min^{-1}
dimensions (W x D x H)	950 x 1.250 x 1.800 mm
weight	580 kg

	FSM 500
EAN	**4260364296211**
Item No.	**225 7350**

Sheet Metal Forming Machines

UB 40 / WB 100 / UBM

UNIVERSAL- AND ANGLE-BENDER

PIC.: WB 100

PIC.: UB 40

PIC.: UBM

WB 100

» precise cold / hot bending of strip-, round- and square steel
» stable construction to mount directly onto the workbench
» stepless adjustable bending stop
» with eccentric quick tension for rational working
» readable bend angle up to 120°
» high repeat precision through bending angle stop
» ideal for plumbers and repair workshops

Description	WB 100
flat steel	100 x 5 mm
round steel	20 mm
square steel	18 x 18 mm
angle steel	60 x 8 mm / 100 x 12 mm
flat steel	100 x 10 mm
round steel	30 mm
square steel	30 x 30 mm
angle steel	100 x 12 mm
max. bending capacity	40 kg/mm²
dimension (L x D x H)	910 x 205 x 255 mm
weight	29 kg
	WB 100
EAN	**4260364291124**
Item No.	**225 0010**

UB 40

» to bend flat, square and round material
» economic turn of usual shapes and bends
» easily transportable, suitable for installation in service vehicles

Description	UB 40
bending capacity - strip steel	30 x 8 mm
bending capacity - round steel	15 mm
bending capacity - square steel	13 x 13 mm
max. bending capacity	40 kg/mm²
dimensions (L x D x H)	710 x 630 x 160 mm
weight	23 kg
	UB 40
EAN	**4260364291117**
Item No.	**225 0004**

UBM

» to bend angles, strips, round - and square materials
» ideal for workshops and modelmakers
» suitable to repair doors, balcony fence, steel brass and copper

Description	UBM
strip steel - radius bend	8 x 50 mm
strip steel - sharp bend	6 x 50 mm
round steel	16 mm
square steel	6 x 16 mm
reinforced steel	12 mm
working height	960 - 1.200 mm
baseplate dimensions	240 x 240 mm
distance mounting holes	195 x 195 mm
weight	35 kg
	UBM
EAN	**4260364291131**
Item No.	**225 0100**

RB 10 T / RBE 10 T

HYDRAULIC PIPE BENDING MACHINES

PIC.: RB 10 T

PIC.: RBE 10 T

RB 10 T / RBE 10 T

» with folding bend frame for rational working
» including 6 pulley sets 1/ 2”, 3/ 4”, 1”, 1 1/ 4”, 1 1/ 2” and 2”
» universal applications for water and gas pipes
» solid foot construction
» bends up to 90° reparable
» 10 tons piston pressure
» fast speed
» also suitable for copper and annealed pipes

RBE 10 T

» electric version 230 V / 50 Hz

Description	RB 10 T	RBE 10 T
bending capacity	1/2“ - 2“	1/2“ - 2“
piston pressure	10 t	10 t
no. of pulley sets	6 St.	6 St.
dimensions (L x D x H)	680 x 510 x 910 mm	680 x 510 x 680 mm
weight	42 kg	53 kg

	RB 10 T	RBE 10 T
EAN	**4260364291148**	**4260364291155**
Item No.	**225 0122**	**225 1122**

E-TBM 60 NC / E-TBM 76 NC

NC CONTROLLED BENDING MACHINES

Tube bending Machine

NEW

PREMIUM-LINE

PIC.: E-TBM 60 NC

E-TBM 60 NC / E-TBM 76 NC

» solid welded construction
» for pipes up to 60 x 4 mm
» workbench with boreholes for holding tools
» NC control with display
» 500 programmes storable
» standard accessories: roller burnishingtool

OPTIONAL EQUIPMENT

» Burnishing tools for different pipe diameters

Description	E-TBM 60 NC	E-TBM 76 NC
Min. diameter	R40 (Ø 60 x 4)	R40 (Ø 16 x 3)
Max. diameter	R150 (Ø 60 x 4)	R220 (Ø 76 x 3)
bending capacity tubes	St 60 x 4 mm / Alu 60 x 8 mm	St 76 x 3 mm / Alu 76 x 6 mm
radius min	3x tube diameter	3x tube diameter
radius max	150 mm	220 mm
bending of full material	40 mm	45 mm
bending of square pipe	40 x 40 x 4 mm	50 x 50 x 5 mm
bending speed	3 m/min	7 m/min
motor power	2,2 kW	3 kW
dimensions (L x D x H)	850 x 750 x 1.050 mm	850 x 850 x 1.050 mm
weight	330 kg	500 kg

	E-TBM 60 NC	E-TBM 76 NC
EAN	**4260364296228**	**4260364296235**
Item No.	**351 3060**	**351 3076**

E-RDBM 42 / E-RDBM 76

MANDREL BENDING MACHINE WITH SPIKES

NEW

PREMIUM-LINE

PIC.: E-RDBM 42

PIC.: E-RDBM 76

On request also without hydraulic / without NC control.

E-RDBM 42 / E-RDBM 76

High quality mandrel bending machines for individual manufacture (up to medium slot sizes) of thin-walled tubes made of steel, stainless steel, aluminum and non-ferrous metals.

Drive, clamping and pipe feed hydraulically.

Bend sequences and mandrel extension programmable via NC control.

Description	E-RDBM 42	E-RDBM 76
Max. diameter	42 mm	76 mm
Max. wall thickness	3 mm	4 mm
bending capacity tubes	St 60 x 4 mm / Alu 60 x 8 mm	St 76 x 3 mm / Alu 76 x 6 mm
Max. bending radius	275 mm	275 mm
Max. bending angle	190 mm	190 mm
spike length	2.400 mm	3.150 mm
Max. hydraulic pressure	140 bar	210 bar
motor power	11 kw	15 kw
dimensions (L x D x H)	3.400 x 1.500 x 1.300 mm	4.000 x 1.700 x 1.400 mm
weight approx.	2.500 kg	4.000 kg

	E-RDBM 42	E-RDBM 76
EAN	**4260364296242**	**4260364296259**
Item No.	**351 3142**	**351 3176**

SM 08

CRIMPING MACHINE MANUAL

standard roller sets

SM 08
INCL. 6 ROLLER SETS

» special steel shaft
» to carry easily
» heavy duty cast iron construction
» adjustable bottom shaft
» in order to produce of different pipe connections
» swiveling machine body with table clamp device
» standard with 6 different roll sets

EXAMPLE OF USE

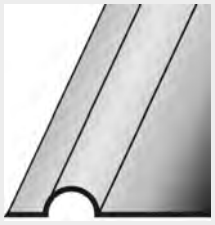
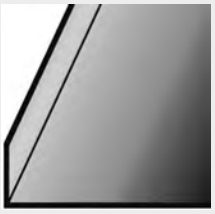

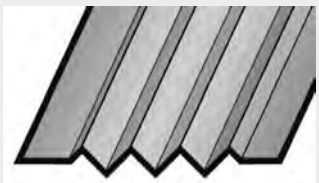

Description	SM 08
max. sheet thickness	0,8 mm
distance between roll centres	50 mm
working range	200 mm
depth	300 mm
length	515 mm
height	800 mm
weight	22 kg

	SM 08
EAN	**4260364291162**
Item No.	**225 1008**

E-SM 12

CRIMPING MACHINE MANUAL

PREMIUM-LINE

STANDARD

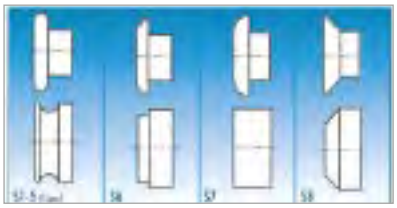

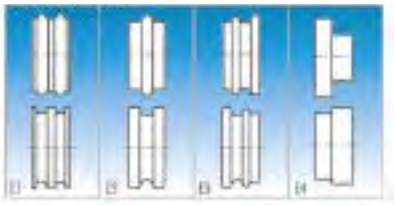

E-SM 12
INCL. 8 ROLLER SETS

» heavy duty cast iron construction
» portable and easy to transport
» 8 standard roll sets
» special steel shaft
» adjustable upper shaft

Description	E-SM 12
max. sheet thickness	1,2 mm
wave length	140 mm
roller diameter	62 mm
roller speed	-
working radius	100 mm
motor power	manual
dimensions (L x D x H)	560 x 220 x 500 mm
weight	50 kg

	E-SM 12
EAN	**4260364291179**
Item No.	**354 1210**

EXAMPLE OF USE

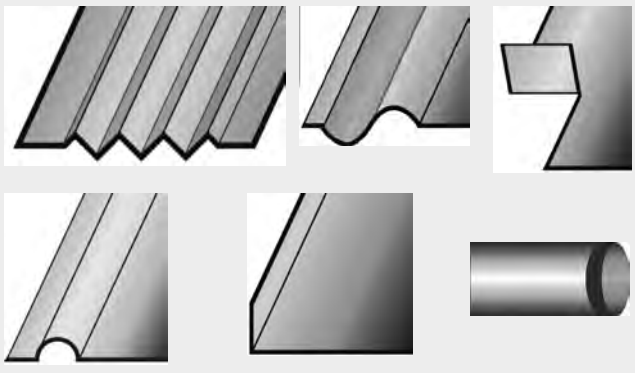

E-SM 12 MP

ELECTRICAL CRIMPING MACHINE

PREMIUM-LINE

STANDARD

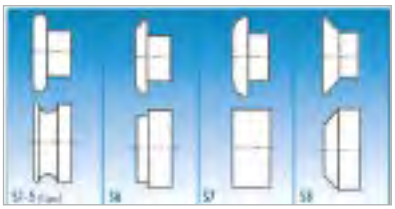

OPTIONAL

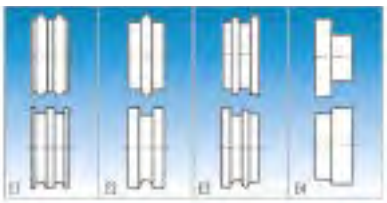

Description	E-SM 12 MP
max. sheet thickness	1,2 mm
wavelength	140 mm
roller diameter	62 mm
roller speed	32 min^{-1}
working radius	100 mm
motor power	400 V / 0,75 kW
dimensions (L x D x H)	900 x 450 x 1.350 mm
weight	135 kg

	E-SM 12 MP
EAN	**4260364291186**
Item No.	**354 1200**

E-SM 12 MP
INCL. STAND

» heavy duty cast iron construction
» substructure
» foot pedal
» 8 standard roller sets
» adjustable bottom shaft
» self-braking motor

EXAMPLE OF USE

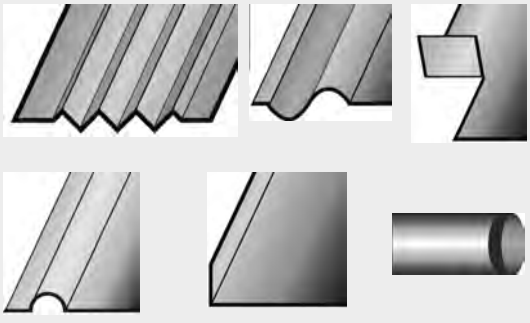

OPTIONAL
MODEL E-SM 12-4 MP

» 4 speeds (30, 60, 90, 120 min^{-1})

Crimping Machine

E-SM 25 MP

CRIMPING MACHINE

PREMIUM-LINE

PIC.: DIAMETER 2,5

PIC.: E-SM 25 MP

E-SM 25 MP
INCL. STAND

» heavy duty cast iron construction
» base frame and base cabinet
» freely movable foot pedal, thus remains free hands for material guidance
» 8 standard roll sets
» forward and backward adjustment
» self-braking motor

Description	E-SM 25 MP
max. sheet thickness	2,5 mm
wavelengts	250 mm
roller diameter	96 mm
roller speed	5 m/min
working range	160 mm
motor power	400 V / 1,5 kW
dimensions (L x D x H)	1.400 x 550 x 1.120 mm
weight	350 kg

	E-SM 25 MP
EAN	**4260364296266**
Item No.	**354 2500**

OPTIONAL-ROLLERS FOR E-SM 25 MP

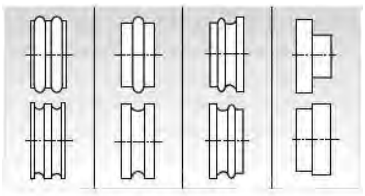

STANDARD-ROLLERS FOR E-SM 25 MP

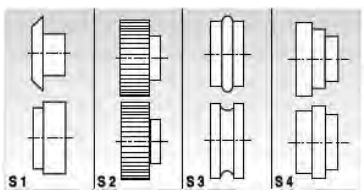

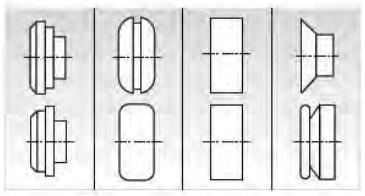

E-SM 40 MP

CRIMPING MACHINE

PREMIUM-LINE

PIC.: E-SM 40 MP

E-SM 40 MP
INCL. STAND

» heavy duty cast iron construction
» base frame and base cabinet
» freely movable foot pedal, thus remains free hands for material guidance
» 4 standard roll sets
» forward and backward adjustment
» self-braking motor

OPTIONAL EQUIPMENT

» Digital Readout System for upper tools
» roller sets for different profiles (see examples on page 151)
» hydraulic infeed for the top roller

Description	E-SM 40 MP
max. sheet thickness	4,0 mm
wavelength	300 mm
roller diameter	126 mm
roller speed	5 m/min
working range	200 mm
motor power	400 V / 2,2 kW
dimensions (L x D x H)	1.700 x 570 x 1.200 mm
weight	500 kg

	E-SM 40 MP
EAN	**4260364296273**
Item No.	**354 4000**

STANDARD-ROLLERS FOR E-SM 40 MP

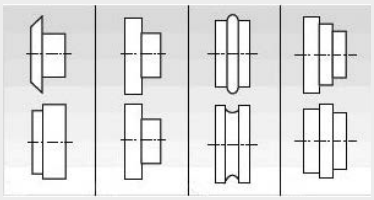

OPTIONAL-ROLLERS FOR E-SM 40 MP

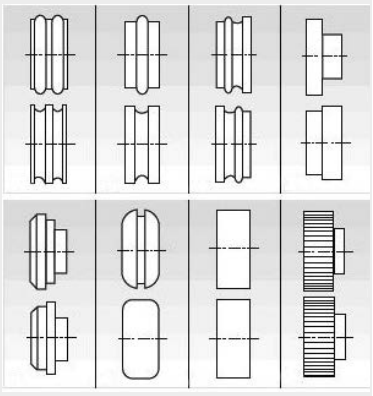

ROLLENSÄTZE

CRIMPING MACHINE

E-SM 12 / E-SM 12 MP

STANDARD

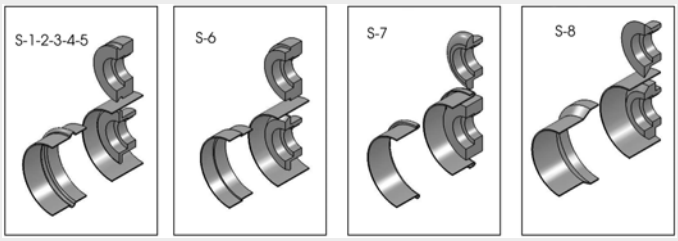

OPTIONAL

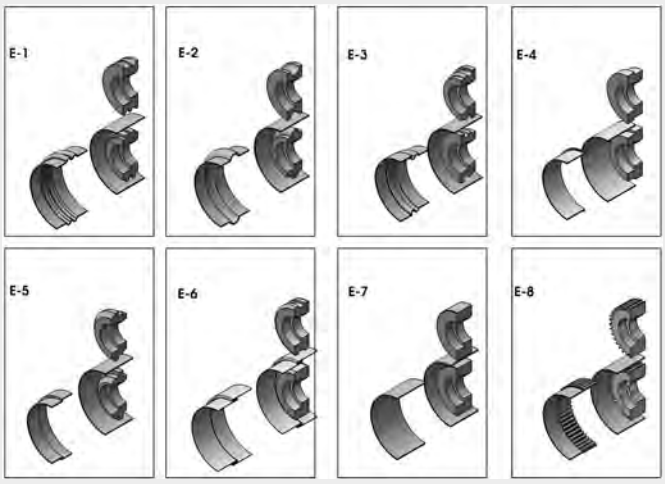

E-SM 25 MP

STANDARD

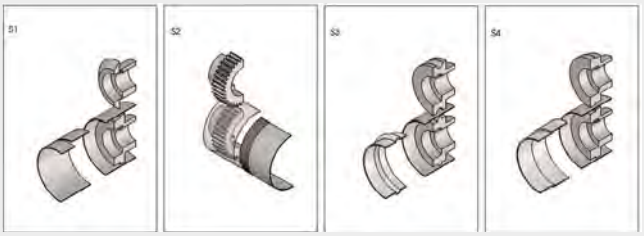

OPTIONAL

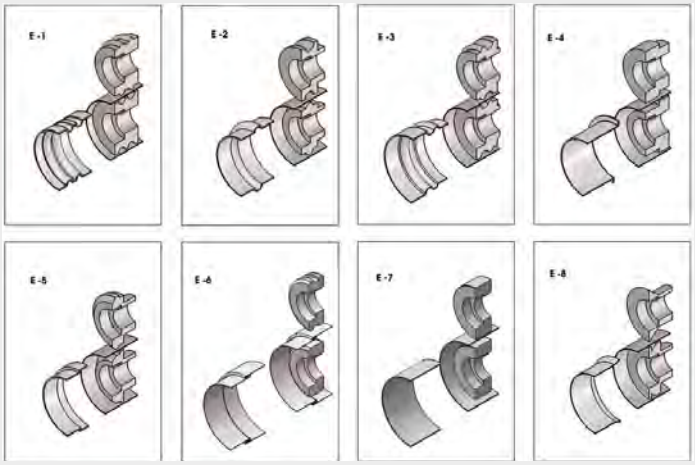

E-SM 40 MP

STANDARD

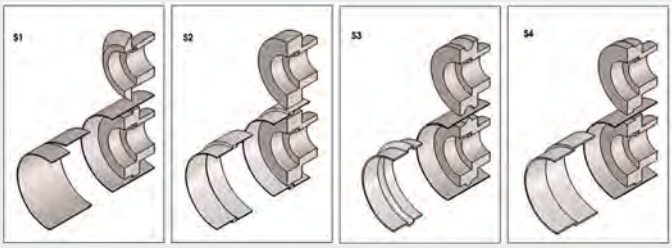

OPTIONAL

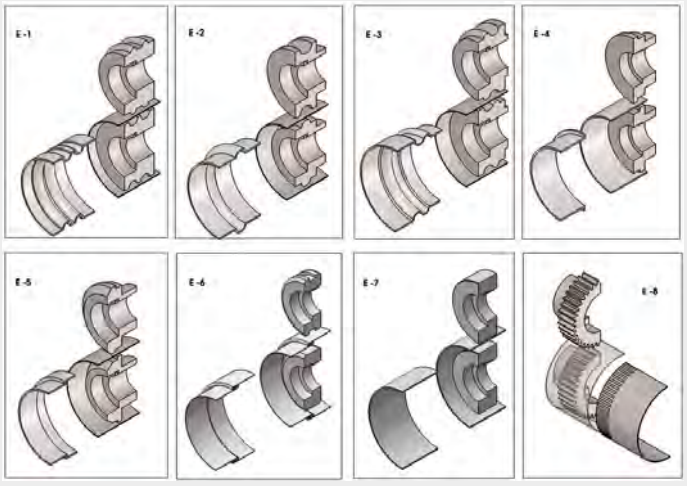

E-FFM 10-3,0
E-FFM 12-3,3 / E-FFM 12-4,0
E-FFM 12-4,1 / E-FFM 12-4,3

PREMIUM-LINE

FOLDING MACHINES

PIC.: E-FFM 12-4,0

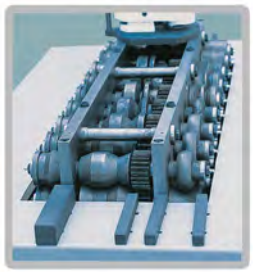

» drive system: with gear
» ideal for industry and handcraft
» high-quality machine

Bitte Falzformen angeben (Typen 1-4):

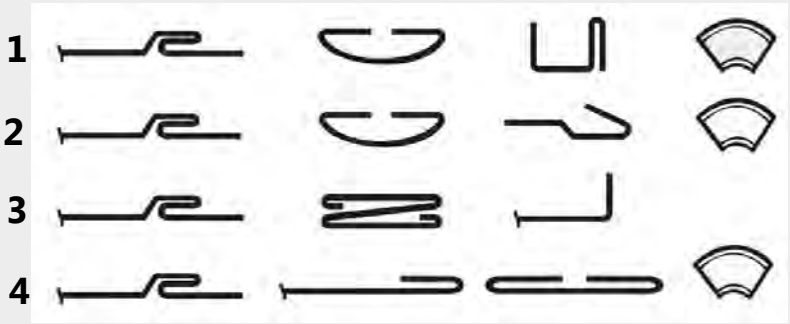

7 STATION FOLDING MACHINE

Description	E-FFM 10-3,0
max. capacity	0,5 / 1,0 mm
operating speed	4 m/min
motor power	400 V / 50 Hz / 1,1 kW
dimensions (W x D x H)	460 x 1.000 x 1.000 mm
weight	270 kg
Completion	**E-FFM 10-3,0**
EAN	**354 3130**
Item No.	**4260364298802**

fold forms 1 = **E-FFM 12-3,3**
fold forms 2 = **E-FFM 12-4,0**
fold forms 3 = **E-FFM 12-4,1**
fold forms 4 = **E-FFM 12-4,3**

9 STATION FOLDING MACHINE

Description	E-FFM 12-3,3	E-FFM 12-4,0	E-FFM 12-4,1	E-FFM 12-4,3
max. capacity	0,5 / 1,2 mm	0,5 / 1,2 mm	0,5 / 1,2 mm	0,5 / 1,2 mm
operating speed	6 m/min	6 m/min	6 m/min	6 m/min
motor power	400 V / 50 Hz / 2,2 kW	400 V / 50 Hz / 2,2 kW	400 V / 50 Hz / 2,2 kW	400 V / 50 Hz / 2,2 kW
dimensions (W x D x H)	800 x 1.300 x 1.100 mm	800 x 1.300 x 1.100 mm	800 x 1.300 x 1.100 mm	800 x 1.300 x 1.100 mm
weight	456 kg	456 kg	456 kg	456 kg
	E-FFM 12-3,3	**E-FFM 12-4,0**	**E-FFM 12-4,1**	**E-FFM 12-4,3**
EAN	**4260364294651**	**4260364294637**	**4260364294644**	**4260364294668**
Item No.	**354 3133**	**354 3140**	**354 3141**	**354 3143**

E-PFM 13

PNEUMATIC REBATE PRESSING MACHINE

PREMIUM-LINE

PIC.: E-PFM 13

E-PFM 13

» pinion geared clamping system
» easy handling through pneumatic pressure piston
» clamping and turning controlled by foot pedal
» protection of the pneumatic system through air strainer
» hardened folding rollers
» slip system with ball bearing
» construction according to EC safety standards

Description	E-PFM 13
fold length	1.300 mm
min. fold diameter	120 mm
max. fold diameter	1.000 mm
operating pressure	8 bar
pressure performance	1.000 kg
motor power	400 V / 50 Hz / 0,37 kW
dimensions (L x D x H)	1.720 x 900 x 1.650 mm
weight	300 kg

	E-PFM 13
EAN	**4260364294620**
Item No.	**354 3013**

E-BKS 6 / E-BKS 8

FLANGING MACHINES

PREMIUM-LINE

PIC.: E-BKS 6

E-BKS 6 / E-BKS 8

» standard one kit flanging rolls (R25) and one kit blades
» extreme solid and robust cast-iron construction
» blade made of special steel K2379, in bronze bearing
» blades are hardened, adjustable and regrindable
» gear motor with brake system
» cutting and flanging with one head
» excellent price-performance ratio

Description	E-BKS 6	E-BKS 8
sheet thickness	max. 6,0 mm	max. 8,0 mm
min. workpiece	440 mm	720 mm
max. workpiece	4.000 mm	4.500 mm
max. flanging radius	35 mm	100 mm
motor power	400 V / 50 Hz / 8 kW	400 V / 50 Hz / 10 kW
dimensions (L x D x H)	4.250 x 720 x 2.000 mm	4.600 x 1.250 x 2.700 mm
weight	2.050 kg	4.400 kg

	E-BKS 6	E-BKS 8
EAN	**4260364294545**	**4260364294552**
Item No.	**353 4006**	**353 4008**

OPTIONAL EQUIPMENT

» flanging rolls (50, 75 and 100)
» extra set of cutting blades

Bending Machines

AKB 1.020-2,5

BENDING MACHINE

Das Original Epple Maschinen®

Hardened segments on upper and lower cheek as standard.

AKB 1.020-2,5

WITH SEGMENTS (UPPER AND LOWER DETACHABLE SEGMENTS)

» ideal for industry and handcraft
» high quality in a modern design
» foot operated upper beam which gives you free hands for the working material
» self-lubricated bearings
» standard with detachable upper and lower beams
» heavy support cylinder enables folding of steel sheets up to 2,5 mm
» opening between the upper - and lower beams can be adjusted to 50 mm

Description	AKB 1.020-2,5
working length	max. 1.020 mm
sheet thickness (hardness ≤ 48 Rockwell)	max. 2,5 mm
bending angle	max. 135°
spindle hole	50 mm
dimensions (L x D x H)	1.340 x 940 x 1.180 mm
weight	320 kg
	AKB 1.020-2,5
EAN	**4260364291193**
Item No.	**125 0220**

» bending performance data refer to 24 kg/m² sheet bending limit
» sheet thickness for stainless steel: factor 0,5
» sheet thickness for aluminum: factor 1,2

AKB 1.020-2,5 G

BENDING MACHINE

Hardened segments on upper and lower cheek as standard.

AKB 1.020-2,5 G

WITH SEGMENTS (UPPER AND LOWER DETACHABLE SEGMENTS)

» ideal for industry and handcraft
» high quality in a modern design
» foot operated upper beam which gives you free hands for the working material
» self-lubricated bearings
» standard with detachable upper and lower beams
» heavy support cylinder enables folding of steel sheets up to 2,5 mm
» opening between the upper - and lower beams can be adjusted to 50 mm

» bending performance data refer to 24 kg/m²
sheet bending limit
» sheet thickness for stainless steel: factor 0,5
» sheet thickness for aluminum: factor 1,2

Description	AKB 1.020-2,5 G
working length	max. 1.020 mm
sheet thickness (hardness ≤ 48 Rockwell)	max. 2,5 mm
bending angle	max. 135°
spindle hole	50 mm
dimensions (L x D x H)	1.346 x 810 x 1.243 mm
weight	430 kg

	AKB 1.020-2,5 G
EAN	**4260364291209**
Item No.	**125 1220**

AKB 2.020-2,0

BENDING MACHINE

PIC.: AKB 2.020-2,0

AKB 2.020-2,0

WITH SEGMENTS (UPPER AND LOWER DETACHABLE SEGMENTS)

» ideal for industry and handcraft
» high quality in a modern design
» foot operated upper beam which gives you free hands for the working material
» self-lubricated bearings
» standard with top and bottom removable segments
» spring-loaded dampers, which makes it easier to bend sheet metal up to 2.0 mm
» opening between the upper- and lower beams can be adjusted to 50 mm

OPTIONAL EQUIPMENT

» manually adjustable backgauge

» bending performance data refer to 24 kg/m² sheet bending limit
» sheet thickness for stainless steel: factor 0,5
» sheet thickness for aluminum: factor 1,2

Description	AKB 2.020-2,0
working length	max. 2.020 mm
sheet thickness (hardness ≤ 150 Rockwell)	max. 2,0 mm
bending angle	max. 135°
spindle hole	50 mm
dimensions (L x D x H)	2.300 x 1.200 x 950 mm
weight	560 kg

	AKB 2.020-2,0
EAN	**4260364291216**
Item No.	**125 0320**

E-AKB-S 1.220-0,8 / E-AKB-S 2.040-0,8
E-AKB-S 2.540-0,8 / E-AKB-S 3.040-0,8

MANUAL BENDING MACHINE WITH ROLLER SHEARS

NEW

PREMIUM-LINE

PIC.: E-AKB-S 2.540-0,8

E-AKB-S 1.220-0,8 / E-AKB-S 2.040-0,8 / E-AKB-S 2.540-0,8 / E-AKB-S 3.040-0,8

Manual bending machine with additional sheet shears for thin sheets up to 0.8mm (also e.g. copper, aluminum or zinc sheet) in one operation for edges and cutting.

Description	E-AKB-S 1.220-0,8	E-AKB-S 2.040-0,8	E-AKB-S 2.540-0,8	E-AKB-S 3.040-0,8
working length	max. 1.220 mm	max. 2.040 mm	max. 2.540 mm	max. 3.040 mm
sheet thickness (hardness ≤ 48 Rockwell)	max. 0,8 mm	max. 0,8 mm	max. 0,8 mm	max. 0,8 mm
bending angle	max. 110°	max. 110°	max. 110°	max. 110°
dimensions (L x D x H)	1.650x 320 x 850 mm	2.400x 750 x 850 mm	3.000 x 750 x 850 mm	3.500 x 750 x 850 mm
weight	180 kg	290 kg	350 kg	440 kg
	E-AKB-S 1.220-0,8	**E-AKB-S 2.040-0,8**	**E-AKB-S 2.540-0,8**	**E-AKB-S 3.040-0,8**
EAN	**426036429830**	**426036429831**	**426036429832**	**426036429833**
Item No.	**325 0122**	**325 0204**	**325 0254**	**325 0304**

MAKB 1.250-1,6 / MAKB 2.500-1,6
MAKB 3.200-1,2

MAGNETIC BENDING MACHINES

PIC.: MAKB 1.250-1,6

Description	MAKB 1.250-1,6	MAKB 2.500-1,6	MAKB 3.200-1,2
folding length	1.250 mm	2.590 mm	3.290 mm
fixing pressure	6 t	12 t	10 t
sheet thickness (hardness ≤ 48 Rockwell)	1,6 mm	1,6 mm	1,2 mm
weight	175 kg	290 kg	381 kg
	MAKB 1.250-1,6	**MAKB 2.500-1,6**	**MAKB 3.200-1,2**
EAN	**4260364294484**	**4260364296280**	**4260364296297**
Item No.	**125 5125**	**125 5250**	**125 5320**

Note: Please do not use the machine when you have a cardiac pacemaker

MAKB 1.250-1,6 / MAKB 2.500-1,6 / MAKB 3.200-1,2

» easy, quick and comfortable handling
» ideal for bending aluminum, copper, steel, high-quality steel etc.
» powerful electromagnetic system for ideal bending results
» the clamping over the entire width guarantees a precise bending result
» segmentation in mm: 25 - 40 - 50 - 70 - 140 - 280 - 700 - 1.250
» exact angle adjustment up to 180°

INCLUDED IN DELIVERY

» sharp bending rail
» bending angle stop, widening, bending cheek and rear stop
» sharp bending bar and narrow slotted bending bar
» 7 bending segments
» foot pedal

Note: Please do not use the machine when you have a cardiac pacemaker

Watch our product movie of this fascinating machine to discover the numerous bending possibilities.

AKB 2.020-1,5 E / AKB 2.020-1,5 ES
AKB 2.520-1,0 E / AKB 2.520-1,0 ES
AKB 3.020-1,0 E / AKB 3.020-1,0 ES

BENDING MACHINES WITH MOTOR

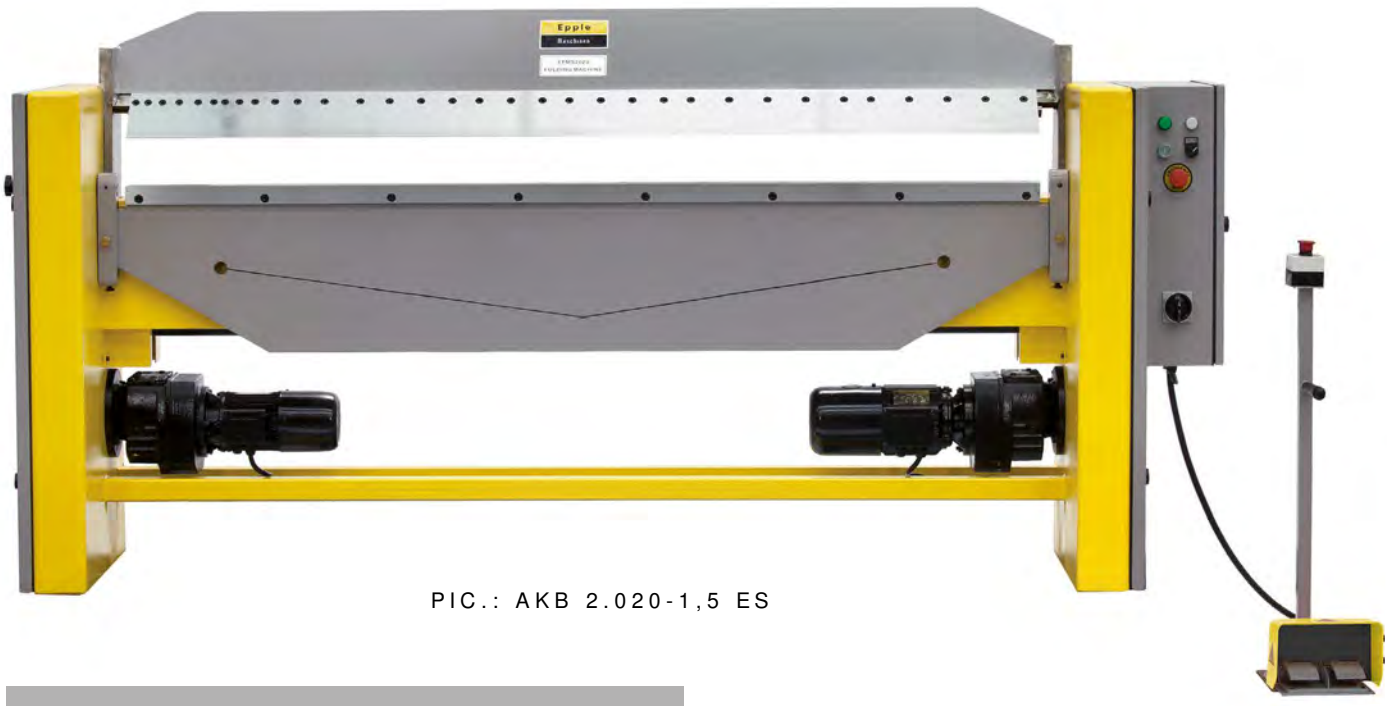

PIC.: AKB 2.020-1,5 ES

» bending performance data refer to 24 kg/m² sheet bending limit
» sheet thickness for stainless steel: factor 0,5
» sheet thickness for aluminum: factor 1,2

For more technical data check page 163.

Description	AKB 2.020-1,5 E	AKB 2.020-1,5 ES	AKB 2.520-1,0 E
working length	max. 2.000 mm	max. 2.000 mm	max. 2.500 mm
sheet thickness (hardness ≤ 50 Rockwell)	max. 1,5 mm	max. 1,5 mm	max. 1,0 mm
bending angle	0° - max. 135°	0° - max. 135°	0° - max. 135°
spindle hole	100 mm	100 mm	100 mm
motor power pressing	0,37 kW	0,37 kW	0,37 kW
motor power edging	0,75 kW	0,75 kW	0,75 kW
dimensions (L x D x H)	2.830 x 760 x 1.410 mm	2.830 x 760 x 1.410 mm	3.330 x 760 x 1.410 mm
weight	1.200 kg	1.260 kg	1.600 kg
	AKB 2.020-1,5 E	**AKB 2.020-1,5 ES**	**AKB 2.520-1,0 E**
EAN	**4260364291223**	**4260364291230**	**4260364291247**
Item No.	**125 2202**	**125 3202**	**125 2252**

PIC.: OPTIONAL BACK GAUGE (MANUALLY)

PIC.: OPTIONAL BACK GAUGE (VIA HAND WHEEL)

BENDING MACHINES

» ideal for industry and handcraft
» high quality in a modern design
» foot operated upper beam which gives you free hands for the working material
» self-lubricated bearings
» opening between the upper- and lower beams can be adjusted up to 100 mm

E = electrical adjustment
ES = electrical adjustment and upper flange with detachable liners

» bending performance data refer to 24 kg/m² sheet bending limit
» sheet thickness for stainless steel: factor 0,5
» sheet thickness for aluminum: factor 1,2

Description	AKB 2.520-1,0 ES	AKB 3.020-1,0 E	AKB 3.020-1,0 ES
working length	max. 2.500 mm	max. 3.000 mm	max. 3.000 mm
sheet thickness (hardness ≤ 50 Rockwell)	max. 1,0 mm	max. 1,0 mm	max. 1,0 mm
bending angle	0° - max. 135°	0° - max. 135°	0° - max. 135°
spindle hole	100 mm	100 mm	100 mm
motor power pressing	3.330 x 760 x 1.410 mm	3.830 x 760 x 1.450 mm	3.830 x 760 x 1.450 mm
motor power edging	1.600 kg	1.930 kg	1.930 kg
dimensions (L x D x H)	0,37 kW	0,37 kW	0,37 kW
weight	0,75 kW	0,75 kW	0,75 kW
	AKB 2.520-1,0 ES	**AKB 3.020-1,0 E**	**AKB 3.020-1,0 ES**
EAN	**4260364291254**	**4260364291261**	**4260364291278**
Item No.	**125 3252**	**125 2302**	**125 3302**

E-AKBM 2.050-4,5 / E-AKBM 2.550-3,5

BENDING MACHINES WITH MOTOR

NEW

PREMIUM-LINE

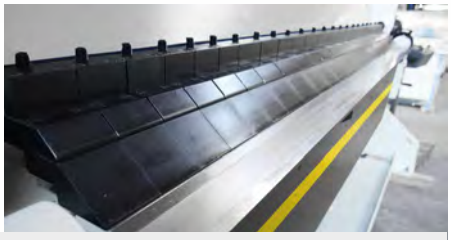

Bending Machine

E-AKBM 2.050-4,5 / E-AKBM 2.550-3,5

Hydraulic swivel bending machine with very stable welded construction.
Easy adjustment of upper and lower beam by means of handwheel, bending angle adjustment via scale up to 135°, swivel operation via joystick or foot pedal.

» hardened bending formers
» 3-fold foot pedal
» manually adjustable backgauge

Description	E-AKBM 2.050-4,5	E-AKBM 2.550-3,5
working length	2.050 mm	2.550 mm
backgauge	up to 600 mm	up to 600 mm
sheet thickness (hardness ≤ 50 Rockwell)	max. 4,5 mm	max. 3,5 mm
bending angle	0° - 135°	0° - 135°
spindle hole	75 mm	75 mm
motor power	400 V / 50 Hz / 4 kW	400 V / 50 Hz / 5,5 kW
dimensions (L x D x H)	2.650 x 1.020 x 1.700 mm	3.250 x 1.020 x 1.700 mm
weight	2.600 kg	3.200 kg
	E-AKBM 2.050-4,5	**E-AKBM 2.550-3,5**
EAN	**4260364297782**	**4260364297799**
Item No.	**325 1205**	**325 1255**

Further versions on request.

Round Bending-/Roller Bending Machines

RM 1.020-1,5 / RME 1.020-1,5

3-ROLLER-ROUND BENDING MACHINES

PIC.: RM 1.020-1,5

PIC.: RME 1.020-1,5

RM 1.020-1,5 / RME 1.020-1,5
WITH ELECTRIC MOTOR AND CONE BENDING DEVICE

» heavy duty cast iron construction
» rolls are of SAE-1050 quality steel
» asymmetrical 3-roller quality bending roller
» operable at the left / right
» upper roll with indicatory slot
» lower roll adjustment with adjusting lever and eccentric
» back roll through hand wheel
» lower and back rolls are supplied with various grooves for rolling of wire inserts or smaller work pieces

» heavy duty cast iron construction
» rolls are of wear-resistant steel
» asymmetrical 3-roller quality bending roller
» upper roll with indicatory slot
» lower roll adjustment with adjusting lever and eccentric
» back roll through hand wheel
» lower and back rolls are supplied with various grooves for rolling of wire inserts or smaller work pieces
» transmission gear
» foot operating enables you free hands for the working material
» E-motor 400 V / 750 W with reduction gear
» foot pedal for forward and reverse
» safety barrier with emergency stop switch

» bending performance data refer to 24 kg/m² sheet bending limit
» sheet thickness for stainless steel: factor 0,5
» sheet thickness for aluminum: factor 1,2

When ordering please name the type of material which will be used

Description	RM 1.020-1,5
roller length	1.020 mm
sheet thickness (hardness ≤ 150 HB)	1,5 mm
roller diameter	60 mm
min. bending radius	35 mm
dimensions (L x D x H)	1.700 x 540 x 1.110 mm
weight	250 kg
	RM 1.020-1,5
EAN	**4260364291285**
Item No.	**125 0520**

Description	RME 1.020-1,5
roller length	1.020 mm
sheet thickness (hardness ≤ 150 HB)	1,5 mm
roller diameter	60 mm
min. bending radius	35 mm
motor power	400 V / 50 Hz / 750 Watt
dimensions (L x D x H)	1.700 x 1.010 x 1.100 mm
weight	300 kg
	RME 1.020-1,5
EAN	**4260364291377**
Item No.	**125 1520**

RME 1.300-1,5

3-ROLLER-ROUND BENDING MACHINES

RME 1.300-1,5
WITH ELECTRIC MOTOR AND
CONE BENDING DEVICE

» heavy duty cast iron construction
» rolls are of wear-resistant steel
» asymmetrical 3-roller quality bending roller
» upper roll with indicatory slot
» lower roll adjustment with adjusting lever and eccentric
» back roll through hand wheel
» lower and back rolls are supplied with various grooves for rolling of wire inserts or smaller work pieces
» transmission gear
» foot operation enables you free hands for the working material
» E-motor 400 V / 750 W with reduction gear
» foot pedal for forward and reverse
» safety barrier with emergency stop switch

Description	RME 1.300-1,5
roller length	1.300 mm
sheet thickness (hardness ≤ 150 HB)	1,5 mm
roller diameter	75 mm
min. bending radius	57,5 mm
motor power	400 V / 50 Hz / 750 Watt
dimensions (L x D x H)	1.700 x 400 x 1.100 mm
weight	300 kg

	RME 1.300-1,5
EAN	**4260364291384**
Item No.	**125 1315**

» bending performance data refer to 24 kg/m² sheet bending limit
» sheet thickness for stainless steel: factor 0,5
» sheet thickness for aluminum: factor 1,2

E-RB 1.050-2,0 / E-RB 1.270-1,5
E-RB 1.550-1,2 / E-RB 2.050-1,0

PREMIUM-LINE

3-ROLLER-ROUND BENDING MACHINES

PIC.: E-RB 1.270-1,5

E-RB 1.050-2,0 / E-RB 1.270-1,5
E-RB 1.550-1,2 / E-RB 2.050-1,0

» heavy duty cast iron construction
» rolls are of SAE-1050 quality steel
» asymmetrical 3-roller quality bending rollers
» usable from the right and left
» upper roll with straightening groove
» bottom roller adjustment with adjusting lever and eccentric
» rear roller adjustment via hand lever
» bottom and rear roll with wire inlay

When ordering please name the type of material which will be used

» bending performance data refer to 24 kg/m² sheet bending limit
» sheet thickness for stainless steel: factor 0,5
» sheet thickness for aluminum: factor 1,2

Description	E-RB 1.050-2,0	E-RB 1.270-1,5	E-RB 1.550-1,2	E-RB 2.050-1,0
roller length	1.050 mm	1.270 mm	1.550 mm	2.050 mm
sheet thickness (St 37)	max 2,0 mm	max 1,5 mm	max 1,2 mm	max 1,0 mm
roller diameter	75 mm	75 mm	75 mm	75 mm
min. bending diameter	110 mm	110 mm	110 mm	110 mm
dimensions (L x D x H)	1.930 x 700 x 1.160 mm	2.150 x 700 x 1.160 mm	2.430 x 700 x 1.160 mm	2.930 x 700 x 1.160 mm
weight	300 kg	330 kg	365 kg	525 kg
	E-RB 1.050-2,0	**E-RB 1.270-1,5**	**E-RB 1.550-1,2**	**E-RB 2.050-1,0**
EAN	**4260364291292**	**4260364291308**	**4260364291315**	**4260364291322**
Item No.	**352 0050**	**352 0127**	**352 0155**	**352 0205**

	E-RB 1.050-2,0 GW	E-RB 1.270-1,5 GW	E-RB 1.550-1,2 GW	E-RB 2.050-1,0 GW
EAN	**4260364291339**	**4260364291346**	**4260364291353**	**4260364291360**
Item No.	**352 0055**	**352 1127**	**352 1155**	**352 1205**

GW = hardened rolls

E-RME 1.050-2,0 / E-RME 1.270-1,5
E-RME 1.550-1,2 / E-RME 2.050-1,0

3-ROLLER-ROUND BENDING MACHINES

PREMIUM-LINE

When ordering please name the type of material which will be used

- **bending performance data refer to 24 kg/m² sheet bending limit**
- **sheet thickness for stainless steel: factor 0,5**
- **sheet thickness for aluminum: factor 1,2**

PIC.: E-RME 1.050-2,0

E-RME 1.050-2,0 / E-RME 1.270-1,5
E-RME 1.550-1,2 / E-RME 2.050-1,0

- heavy duty cast iron construction
- rolls are of SAE-1050 quality steel
- asymmetrical 3-roller quality bending rollers
- with cone device
- upper roll with indicatory slot
- lower and back rolls are supplied with various grooves for rolling of wire inserts or smaller work pieces

Description	E-RME 1.050-2,0	E-RME 1.270-1,5	E-RME 1.550-1,2	E-RME 2.050-1,0
roller length	max. 1.050 mm	max. 1.270 mm	max. 1.550 mm	max. 2.050 mm
sheet thickness (St 37)	max. 2,0 mm	max. 1,5 mm	max. 1,2 mm	max. 1,0 mm
roller diameter	75 mm	75 mm	75 mm	75 mm
min. bending diameter	110 mm	110 mm	110 mm	110 mm
motor power	400 V / 50 Hz / 1,5 kW	400 V / 50 Hz / 1,5 kW	400 V / 50 Hz / 1,5 kW	400 V / 50 Hz / 1,5 kW
dimensions (L x D x H)	1.610 x 700 x 1.160 mm	1.830 x 700 x 1.160 mm	2.110 x 700 x 1.160 mm	2.610 x 700 x 1.160 mm
weight	385 kg	400 kg	430 kg	590 kg
	E-RME 1.050-2,0	**E-RME 1.270-1,5**	**E-RME 1.550-1,2**	**E-RME 2.050-1,0**
EAN	**4260364291391**	**4260364291407**	**4260364291414**	**4260364291421**
Item No.	**352 2050**	**352 2127**	**352 2155**	**352 2205**

	E-RME 1.050-2,0 GW	E-RME 1.270-1,5 GW	E-RME 1.550-1,2 GW	E-RME 2.050-1,0 GW
EAN	**4260364291438**	**4260364291445**	**4260364291452**	**4260364291469**
Item No.	**352 2055**	**352 3127**	**352 3155**	**352 3205**

GW = hardened rolls

E-RBE 1.050-3,0 / E-RBE 1.270-2,5
E-RBE 1.550-2,0 / E-RBE 2.050-1,5

3-ROLLER-ROUND BENDING MACHINES

PREMIUM-LINE

PIC.: E-RBE 1.050-3,0

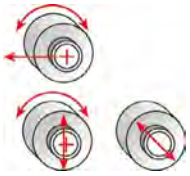

OPTIONAL EQUIPMENT

» motorized roller adjustment
» digital display
» hardened rollers

» bending performance data refer to 24 kg/m² sheet bending limit
» sheet thickness for stainless steel: factor 0,5
» sheet thickness for aluminum: factor 1,2

When ordering please name the type of material which will be used

E-RBE 1.050-3,0 / E-RBE 1.270-2,5
E-RBE 1.550-2,0 / E-RBE 2.050-1,5

» heavy duty cast iron construction
» rolls are of SAE-1050 quality steel
» asymmetrical 3-roller quality bending roller
» upper roll with indicatory slot
» lower roll adjustment with adjusting lever and eccentric
» back roll through hand wheel
» with cone device
» lower and back rolls are supplied with various groves for rolling of wire inserts or smaller work pieces
» E-motor 400 V / 1,1 kW / 1,5 kW
» foot pedal for forward and reverse
» for security - emergency stop

Description	E-RBE 1.050-3,0	E-RBE 1.270-2,5	E-RBE 1.550-2,0	E-RBE 2.050-1,5
roller length	max. 1.050 mm	max. 1.270 mm	max. 1.550 mm	max. 2.050 mm
sheet thickness (St 37)	max. 3,0 mm	max. 2,5 mm	max. 2,0 mm	max. 1,5 mm
roller diameter	90 mm	90 mm	90 mm	95 mm
min. bending diameter	135 mm	135 mm	135 mm	140 mm
motor power	400 V / 50 Hz / 1,1 kW	400 V / 50 Hz / 1,1 kW	400 V / 50 Hz / 1,5 kW	400 V / 50 Hz / 1,5 kW
dimensions (L x D x H)	1.630 x 700 x 1.200 mm	1.850 x 700 x 1.200 mm	2.130 x 700 x 1.200 mm	2.630 x 700 x 1.200 mm
weight	455 kg	490 kg	545 kg	665 kg
	E-RBE 1.050-3,0	**E-RBE 1.270-2,5**	**E-RBE 1.550-2,0**	**E-RBE 2.050-1,5**
EAN	**4260364291476**	**4260364291483**	**4260364291513**	**4260364291520**
Item No.	**352 1050**	**352 1270**	**352 1550**	**352 3050**

	E-RBE 1.050-3,0 GW	E-RBE 1.270-2,5 GW	E-RBE 1.550-2,0 GW	E-RBE 2.050-1,5 GW
EAN	**4260364291490**	**4260364291506**	**4260364291537**	**4260364291544**
Item No.	**352 1055**	**352 1275**	**352 1555**	**352 3055**

GW = hardened rolls

E-RBE-H 1.270-2,5 / E-RBE-H 1.550-2,0
E-RBE-H 2.050-1,5

3-ROLLER-ROUND BENDING MACHINES

PREMIUM-LINE

PIC.: E-RBE-H 1.270-2,5

» bending performance data refer to 24 kg/m² sheet bending limit
» sheet thickness for stainless steel: factor 0,5
» sheet thickness for aluminum: factor 1,2

E-RBE-H 1.270-2,5 / E-RBE-H 1.550-2,0
E-RBE-H 2.050-1,5

» heavy duty cast iron construction
» asymmetrical 3-roller quality bending roller
» upper and lower rolls easy adjustable
» rolls of high pressure steel
» lower roller adjustment due to control lever and excentre
» roller adjustment due to handwheel
» groove on lower and back roll
» foot operation enables you free hands for the working material
» security switch / emergency stop

OPTIONAL EQUIPMENT

» hardened rollers
» digital readout for rear rollers
» stepless roller speeds

Description	E-RBE-H 1.270-2,5	E-RBE-H 1.550-2,0	E-RBE-H 2.050-1,5
roller length	1.270 mm	1.550 mm	2.050 mm
sheet thickness	2,5 mm	2,0 mm	1,5 mm
roller diameter	90 mm	90 mm	95 mm
roller speed	6 m/min	6 m/min	6 m/min
motor power	400 V / 50 Hz / 1,1 kW	400 V / 50 Hz / 1,5 kW	400 V / 50 Hz / 1,5 kW
wire chunks diameter	4 / 7 / 10 mm	4 / 7 / 10 mm	4 / 7 / 10 mm
dimensions (L x D x H)	1.850 x 700 x 1.200 mm	2.130 x 700 x 1.200 mm	2.630 x 700 x 1.200 mm
weight	520 kg	580 kg	715 kg
	E-RBE-H 1.270-2,5	**E-RBE-H 1.550-2,0**	**E-RBE-H 2.050-1,5**
EAN	**4260364296303**	**4260364296310**	**4260364296327**
Item No.	**352 1225**	**352 1520**	**352 2015**

E-RWE 1.050-3,0 / E-RWE 1.270-2,5
E-RWE 1.550-2,0 / E-RWE 2.050-1,5

3-ROLLER-ROUND BENDING MACHINES

3-Roller-Round Bending Machine

NEW

PREMIUM-LINE

PIC.: E-RWE 1.270-2,5

OPTIONAL EQUIPMENT

» hardened rollers

» bending performance data refer to 24 kg/m² sheet bending limit
» sheet thickness for stainless steel: factor 0,5
» sheet thickness for aluminum: factor 1,2

When ordering please name the type of material which will be used

E-RWE 1.050-3,0 / E-RWE 1.270-2,5
E-RWE 1.550-2,0 / E-RWE 2.050-1,5

» heavy and stable cast iron construction
» top and bottom rollers with gear drive
» rolls made of SAE-1050 quality steel
» asymmetrical 3-roller system with swing-out top roller and eccentric shutter
» rear roller adjustment via handwheel
» rollers with wire insertion groove
» with conical bending device
» the foot control allows both hands to remain free for material handling
» electric motor 400 V / 1,1 kW / 1,5 kW
» foot pedal for forward and reverse motion
» safety device with emergency stop switch

Description	E-RWE 1.270-3,0	E-RWE 1.550-2,5	E-RWE 2.050-1,8	E-RWE 2.550-1,0
roller length	max. 1.270 mm	max. 1.550 mm	max. 2.050 mm	max. 2.550 mm
sheet thickness (St 37)	max. 3,0 mm	max. 2,5 mm	max. 1,8 mm	max. 1,0 mm
roller diameter	100 mm	100 mm	200 mm	100 mm
motor power	400 V / 50 Hz / 1,1 kW	400 V / 50 Hz / 1,1 kW	400 V / 50 Hz / 1,5 kW	400 V / 50 Hz / 1,5 kW
roller speed	6 m/min	6 m/min	6 m/min	6 m/min
dimensions (L x D x H)	1.850 x 700 x 1.200 mm	2.130 x 700 x 1.200 mm	2.630 x 700 x 1.200 mm	3.180 x 700 x 1.200 mm
weight	650 kg	700 kg	850 kg	950 kg
	E-RWE 1.050-3,0	**E-RWE 1.270-2,5**	**E-RWE 1.550-2,0**	**E-RWE 2.050-1,5**
EAN	**4260364298352**	**4260364298369**	**4260364298376**	**4260364298345**
Item No.	**352 1230**	**352 1525**	**352 2018**	**351 2510**

	E-RWE 1.270-3,0 GW	E-RWE 1.550-2,5 GW	E-RWE 2.050-1,8 GW	E-RWE 2.550-1,0 GW
EAN	**4260364298390**	**4260364298406**	**4260364298413**	**4260364298406**
Item No.	**352 3230**	**352 3525**	**352 3018**	**352 3510**

GW = hardened rolls

E-RBM 1.270-4,0 / E-RBM 1.550-4,0
E-RBM 2.050-3,0

MOTORIC 3-ROLLER-ROUND BENDING MACHINES

PREMIUM-LINE

PIC.: E-RBM 1.270-4,0

E-RBM 1.270-4,0 / E-RBM 1.550-4,0
E-RBM 2.050-3,0

» heavy duty cast iron construction
» asymmetrical 3-roller quality bending roller
» upper and lower rolls easy adjustable
» rolls of St.1050 high pressure steel
» with cone device
» groove on lower and back roll
» foot operation enables you free hands for the working material
» powerful 400 V motor

OPTIONAL EQUIPMENT

» motorized roller adjustment
» digital display
» hardened rollers (GW)

Description	E-RBM 1.270-4,0	E-RBM 1.550-4,0	E-RBM 2.050-3,0
roller length	max. 1.270 mm	max. 1.550 mm	max. 2.050 mm
sheet thickness (St 37)	max. 4,0 mm	max. 4,0 mm	max. 3,0 mm
roller diameter	120 mm	140 mm	130 mm
min. bending diameter	180 mm	210 mm	195 mm
motor power	400 V / 50 Hz / 2,2 kW	400 V / 50 Hz / 2,2 kW	400 V / 50 Hz / 2,2 kW
roller speed	3,5 m/min	3,5 m/min	3,5 m/min
dimensions (L x D x H)	2.470 x 750 x 1.000 mm	2.700 x 750 x 1.000 mm	3.200 x 750 x 1.000 mm
weight	1.350 kg	1.420 kg	1.500 kg

	E-RBM 1.270-4,0	E-RBM 1.550-4,0	E-RBM 2.050-3,0
EAN	**4260364291551**	**4260364291568**	**4260364291575**
Item No.	**352 1274**	**352 1554**	**352 2053**

	E-RBM 1.270-4,0 GW	E-RBM 1.550-4,0 GW	E-RBM 2.050-3,0 GW
EAN	**4260364291582**	**4260364291599**	**4260364291605**
Item No.	**352 2274**	**352 2554**	**352 3054**

When ordering please name the type of material which will be used

» bending performance data refer to 24 kg/m² sheet bending limit
» sheet thickness for stainless steel: factor 0,5
» sheet thickness for aluminum: factor 1,2

GW = hardened rolls

E-RBM-S PRO - MODELS

MOTORIC 3-ROLLER-ROUND BENDING MACHINES

PREMIUM-LINE

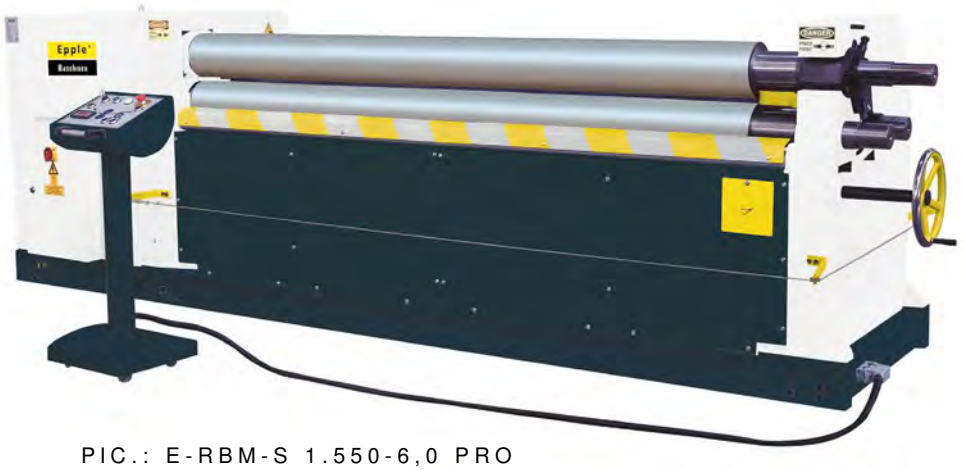

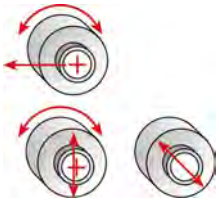

PIC.: E-RBM-S 1.550-6,0 PRO

E-RBM-S PRO - MODELS

- » solid steel construction for highest loads in continuous operation
- » conic bending device as standard
- » motor driven central roller
- » motoric pre-bending by worm gear
- » rollers made of SAE-1050 quality steel
- » speed reduction gear in oil bath
- » brake motor
- » central lubrication
- » separate, mobile control panel

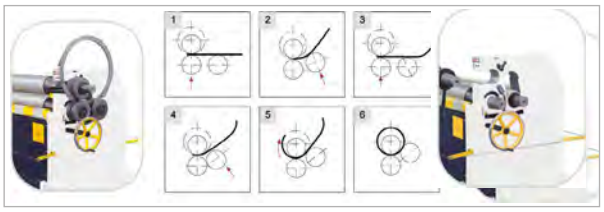

» bending performance data refer to 24 kg/m² sheet bending limit
» sheet thickness for stainless steel: factor 0,5
» sheet thickness for aluminum: factor 1,2

OPTIONAL EQUIPMENT

- » profile bending rolls
- » digital display
- » hardened rollers
- » extended roller ends for placing profile-bending rolls

When ordering please name the type of material which will be used

Description	E-RBM-S PRO 1.550-6,0	E-RBM-S PRO 1.550-9,0	E-RBM-S PRO 2.050-6,0	E-RBM-S PRO 2.550-6,0	E-RBM-S PRO 3.050-6,0
roller length	1.550 mm	1.550 mm	2.050 mm	2.550 mm	3.050 mm
sheet thickness (St 37)	max. 6,0 mm	max. 9,0 mm	max. 6,0 mm	max. 6,0 mm	max. 6,0 mm
roller diameter	130 mm	190 mm	170 mm	190 mm	220 mm
min. bending diameter	195 mm	285 mm	255 mm	285 mm	330 mm
motor power	400 V / 50 Hz / 2,2 kW	400 V / 50 Hz / 4 kW	400 V / 50 Hz / 4 kW	400 V / 50 Hz / 2,2 kW	400 V / 50 Hz / 5,5 kW
dimensions (L x D x H)	3.250 x 650 x 1.020 mm	3.700 x 950 x 1.300 mm	3.850 x 720 x 1.050 mm	4.700 x 950 x 1.300 mm	5.200 x 1.150 x 1.400 mm
weight	1.400 kg	2.750 kg	2.100 kg	3.400 kg	6.000 kg
	E-RBM-S PRO 1.550-6,0	**E-RBM-S PRO 1.550-9,0**	**E-RBM-S PRO 2.050-6,0**	**E-RBM-S PRO 2.550-6,0**	**E-RBM-S PRO 3.050-6,0**
EAN	**4260364291612**	**4260364291629**	**4260364291636**	**4260364291643**	**4260364291650**
Item No.	**353 1556**	**353 1559**	**353 2056**	**353 2556**	**353 3056**

	E-RBM-S PRO 1.550-6,0 GW	E-RBM-S PRO 1.550-9,0 GW	E-RBM-S PRO 2.050-6,0 GW	E-RBM-S PRO 2.550-6,0 GW	E-RBM-S PRO 3.050-6,0 GW
EAN	**4260364291667**	**4260364291674**	**4260364291681**	**4260364291698**	**4260364291704**
Item No.	**353 1557**	**353 1550**	**353 2057**	**353 2557**	**353 3057**

GW = hardened rollers

3-Roller-Round Bending Machine

E-3RBM PRO UHS - MODELS

MOTORIC 3-ROLLER-ROUND BENDING MACHINES

NEW

PREMIUM-LINE

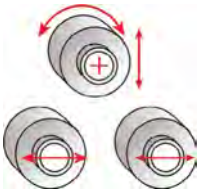

PIC.: E-3RBM PRO UHS 3.100-45,0

Particularly stable machines with optimized roll arrangement for bending thick sheets. As standard, the machines are equipped with hardened rolls, the top roll has two speeds, including a brake system, electronic balancing system and a conical bending device.

The two bottom rollers move horizontally. The distance between the bottom rollers can be reduced for pre-bending tubes with small diameters and small thickness.

Due to the special arrangement of the bottom rolls, plates can be straightened with this machine. The top roll can also be used as a forming roll like a conventional press brake to allow perfect rewinding and calibration of the produced tubes. Funnel moulds with large sheet thickness can also be produced with these machines.

Description	E-3RBM PRO UHS 3.100-55,0	E-3RBM PRO UHS 3.100-60,0	E-3RBM PRO UHS 3.100-65,0
roller length	3100 mm	3.100 mm	3.100 mm
sheet thickness (St 37)	40,0 mm	45,0 mm	50,0 mm
diameter of the upper rolls	450 mm	580 mm	550 mm
diameter of the lower rolls	420 mm	500 mm	500 mm
motor power	400 V / 50 Hz / 52 kW	400 V / 50 Hz / 73,5 kW	400 V / 50 Hz / 73,5 kW
roller speed	1,5 - 5 m/min	1,5 - 4 m/min	1,5 - 4 m/min
dimensions (L x D x H)	6.650 x 2.800 x 2.200 mm	7.4500 x 3.100 x 2.650 mm	7.600 x 3.350 x 2.700 mm
weight	25.000 kg	33.000 kg	45.000 kg
	E-3RBM PRO UHS 3.100-55,0	**E-3RBM PRO UHS 3.100-60,0**	**E-3RBM PRO UHS 3.100-65,0**
EAN	**4260364299151**	**4260364299168**	**4260364299175**
Item No.	**355 3155**	**355 3106**	**355 3165**

Description	E-3RBM PRO UHS 3.100-80,0	E-3RBM PRO UHS 3.100-90,0
roller length	3.100 mm	3.100 mm
sheet thickness (St 37)	65,0 mm	75,0 mm
diameter of the upper rolls	620 mm	680 mm
diameter of the lower rolls	560 mm	600 mm
motor power	400 V / 50 Hz / 169 kW	400 V / 50 Hz / 180 kW
roller speed	1,5 - 4 m/min	1,5 - 4 m/min
dimensions (L x D x H)	9.000 x 4.400 x 3.000 mm	9.200 x 4.500 x 3.000 mm
weight	65.000 kg	73.000 kg
	E-3RBM PRO UHS 3.100-80,0	**E-3RBM PRO UHS 3.100-90,0**
EAN	**4260364299182**	**4260364299199**
Item No.	**355 3181**	**355 3190**

» bending performance data refer to 24 kg/m² sheet bending limit
» sheet thickness for stainless steel: factor 0,5
» sheet thickness for aluminum: factor 1,2

When ordering please name the type of material which will be used

E-RBM-H PRO - MODELS

HYDRAULIC 3-ROLLER-ROUND BENDING MACHINES

PREMIUM-LINE

PIC.: E-RBM-H PRO 1.270-5,0

For technical data check page 177.

E-RBM-H PRO - MODELS

» hydraulic 3-roller round bending machine with asymmetrical roll arrangement, ideal for pre-bending
» 2-axis digital readout system for rear and bottom roller
» conical bending device, motor-driven adjustment of bottom roller
» hydraulic folding bearing
» motorized drive of top and bottom roller
» inclined position of the bottom roller motorized (conical bending)
» hydraulic rear roller feed
» hardened rollers

drop end
» hydraulic drop end for quick removal of machined tube

Digital Readout
» mobile control panel for the control of all elements including 2-axis digital display for back and lower roll

OPTIONAL

» 3 driven rollers

» bending performance data refer to 24 kg/m² sheet bending limit
» sheet thickness for stainless steel: factor 0,5
» sheet thickness for aluminum: factor 1,2

Functional scheme of the bending process

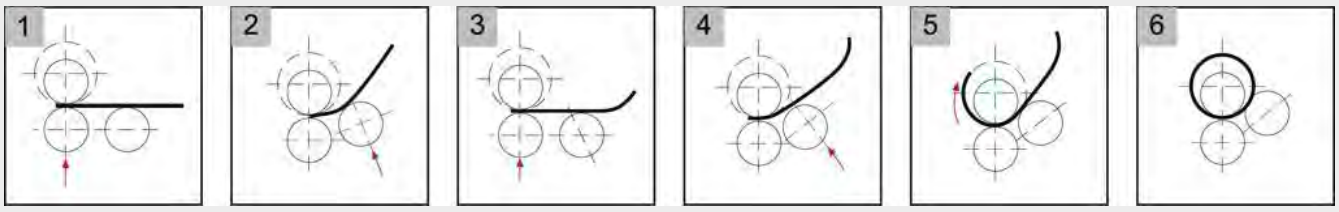

E-RBM-H PRO - MODELS

TECHNICAL DATA

When ordering please name the type of material which will be used

Description	E-RBM-H PRO 1.270-5,0	E-RBM-H PRO 1.270-12,0	E-RBM-H PRO 1.550-6,5
roller length	max. 1.270 mm	max. 1.270 mm	max. 1.550 mm
sheet thickness (St 37)	max. 5,0 mm	max. 12,0 mm	max. 6,5 mm
diameter of the upper and lower rolls	130 mm	200 mm	150 mm
min. bending diameter	650 mm	1.000 mm	750 mm
motor power	400 V / 50 Hz / 3,3 kW	400 V / 50 Hz / 5,5 kW	400 V / 50 Hz / 3,3 kW
roller speed	5 m/min	6 m/min	6 m/min
dimensions (L x D x H)	3.020 x 950 x 1.100 mm	3.070 x 1.150 x 1.290 mm	3.300 x 950 x 1.110 mm
weight	1.750 kg	2.200 kg	2.000 kg
	E-RBM-H PRO 1.270-5,0	**E-RBM-H PRO 1.270-12,0**	**E-RBM-H PRO 1.550-6,5**
EAN	**4260364291711**	**4260364291728**	**4260364291735**
Item No.	**354 1250**	**354 1212**	**354 1565**

Description	E-RBM-H PRO 1.550-12,0	E-RBM-H PRO 2.050-8,0	E-RBM-H PRO 2.050-12,0
roller length	max. 1.550 mm	max. 2.050 mm	max. 2.050 mm
sheet thickness (St 37)	max. 12,0 mm	max. 8,0 mm	max. 12,0 mm
diameter of the upper and lower rolls	220 mm	180 mm	250 mm
min. bending diameter	1.100 mm	900 mm	1.250 mm
motor power	400 V / 50 Hz / 7 kW	400 V / 50 Hz / 5,1 kW	400 V / 50 Hz / 3 kW
roller speed	5 m/min	5 m/min	5 m/min
dimensions (L x D x H)	3.500 x 1.200 x 1.370 mm	3.850 x 1.100 x 1.290 mm	4.000 x 1.200 x 1.370 mm
weight	3.250 kg	2.690 kg	4.200 kg
	E-RBM-H PRO 1.550-12,0	**E-RBM-H PRO 2.050-8,0**	**E-RBM-H PRO 2.050-12,0**
EAN	**4260364291742**	**4260364291759**	**4260364291766**
Item No.	**354 1512**	**354 2080**	**354 2012**

Description	E-RBM-H PRO 2.550-6,0	E-RBM-H PRO 2.550-10,0	E-RBM-H PRO 3.050-9,0
roller length	max. 2.550 mm	max. 2.550 mm	max. 3.050 mm
sheet thickness (St 37)	max. 6,0 mm	max. 10,0 mm	max. 9,0 mm
diameter of the upper and lower rolls	180 mm	250 mm	250 mm
min. bending diameter	900 mm	1.250 mm	1.250 mm
motor power	400 V / 50 Hz / 7,5 kW	400 V / 50 Hz / 7,5 kW	400 V / 50 Hz / 7,5 kW
roller speed	5 m/min	5 m/min	5 m/min
dimensions (L x D x H)	4.350 x 1.100 x 1.290 mm	4.500 x 1.200 x 1.370 mm	5.000 x 1.200 x 1.370 mm
weight	3.070 kg	4.800 kg	5.400 kg
	E-RBM-H PRO 2.550-6,0	**E-RBM-H PRO 2.550-10,0**	**E-RBM-H PRO 3.050-9,0**
EAN	**4260364291773**	**4260364291780**	**4260364291797**
Item No.	**354 2560**	**354 2510**	**354 3090**

E-3RBM PRO HS - MODELS

HYDRAULIC 3-ROLLER-ROUND BENDING MACHINES

PREMIUM-LINE

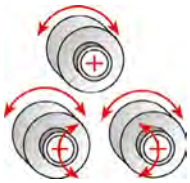

PIC.: E-3RBM PRO HS 4.100-8,0

For technical data check page 179.

E-3RBM PRO HS - MODELS

» all 3 rolls are driven
» oblique positioning of the lower rolls straight from the control panel for conic bending
» hydraulic drop end for easy work piece removal
» hydraulic balance system
» hardened rolls made of forged SAE-1050 quality steel
» digital display for the roller adjustment

profile bending
» with extended roller ends (optional)

bending possibility of cones
» setting for cone bending (standard)

prebending
» easy prebending of the sheets

drop end
» hydraulic drop end for rapid removal of the machined tubes (standard)

E-3RBM PRO HS - MODELS

OPTIONAL EQUIPMENT

» profile bending rolls
» hydraulic, stepless control of the roller speed
» hydraulic support for large radius
» hydraulic side support
» hydraulic tube ejection
» ground and polished rolls

» bending performance data refer to 24 kg/m² sheet bending limit
» sheet thickness for stainless steel: factor 0,5
» sheet thickness for aluminum: factor 1,2

When ordering please name the type of material which will be used

TECHNICAL DATA

Description	E-3RBM PRO HS 2.050-13,0	E-3RBM PRO HS 2.550-8,0	E-3RBM PRO HS 2.550-13,0
roller length	max. 2.050 mm	max. 2.550 mm	max. 2.550 mm
sheet thickness (St 37)	max. 13,0 mm	max. 8,0 mm	max. 13,0 mm
diameter of the upper rolls	240 mm	210 mm	280 mm
diameter of the lower rolls	220 mm	190 mm	260 mm
motor power	400 V / 50 Hz / 7,5 kW	400 V / 50 Hz / 7,5 kW	400 V / 50 Hz / 11 kW
roller speed	5 m/min	5 m/min	5 m/min
dimensions (L x D x H)	3.400 x 1.300 x 1.450 mm	3.900 x 1.200 x 1.300 mm	4.600 x 1.400 x 1.550 mm
weight	5.060 kg	4.570 kg	7.720 kg

	E-3RBM PRO HS 2.050-13,0	E-3RBM PRO HS 2.550-8,0	E-3RBM PRO HS 2.550-13,0
EAN	**4260364291803**	**4260364291810**	**4260364291827**
Item No.	**355 2013**	**355 2580**	**355 2513**

Description	E-3RBM PRO HS 3.100-6,0	E-3RBM PRO HS 3.100-13,0	E-3RBM PRO HS 4.100-8,0
roller length	max. 3.100 mm	max. 3.100 mm	max. 4.100 mm
sheet thickness (St 37)	max. 6,0 mm	max. 13,0 mm	max. 8,0 mm
diameter of the upper rolls	210 mm	300 mm	300 mm
diameter of the lower rolls	190 mm	280 mm	280 mm
motor power	400 V / 50 Hz / 7,5 kW	400 V / 50 Hz / 11 kW	400 V / 50 Hz / 11 kW
roller speed	5 m/min	5 m/min	5 m/min
dimensions (L x D x H)	4.450 x 1.200 x 1.300 mm	5.150 x 1.500 x 1.550 mm	6.150 x 1.500 x 1.550 mm
weight	5.205 kg	9.900 kg	11.800 kg

	E-3RBM PRO HS 3.100-6,0	E-3RBM PRO HS 3.100-13,0	E-3RBM PRO HS 4.100-8,0
EAN	**4260364291834**	**4260364291841**	**4260364291858**
Item No.	**355 3160**	**355 3113**	**355 4180**

E-3RBM PRO HSS - MODELS

HYDRAULIC 3-ROLLER-ROUND BENDING MACHINES

PREMIUM-LINE

PIC.: E-3RBM 3.100-25,0 WITH OPTIONAL VERTICAL OVERHEADCRANE

For technical data check page 181.

When ordering please name the type of material which will be used

E-3RBM PRO HSS - MODELS

» fully hydraulic 3-roller round bending machine with high prebending performance
» solid welded steel construction
» hydraulic drive of all 3 rolls via planetary reduction gear
» hydraulic compensation of the roll rotation speed
» extended roll ends for the application of profile bending rolls
» hardened rolls made of forged SAE-1050 quality steel
» digital display for adjustable lower rolls as standard
» conical bending device as standard

hydraulic device
» with high quality components (view without covering)

drop end
» hydraulic drop end for rapid removal of the machined tubes (standard)

OPTIONAL EQUIPMENT

» various profile rolls
» hydraulic support for large radius
» hydraulic side support
» hydraulic tube ejecting
» ground and polished rolls

» bending performance data refer to 24 kg/m² sheet bending limit
» sheet thickness for stainless steel: factor 0,5
» sheet thickness for aluminum: factor 1,2

Function scheme of the bending process

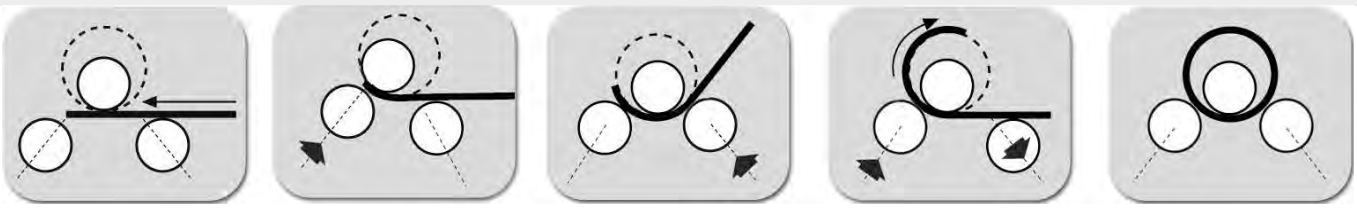

E-3RBM PRO HSS - MODELS

TECHNICAL DATA

Description	E-3RBM PRO HSS 2.050-30,0	E-3RBM PRO HSS 2.050-35,0	E-3RBM PRO HSS 2.550-25,0
roller length	max. 2.050 mm	max. 2.050 mm	max. 2.550 mm
sheet thickness (St 37)	max. 30,0 mm	max. 35,0 mm	max. 25,0 mm
diameter of the upper rolls	350 mm	380 mm	350 mm
diameter of the lower rolls	330 mm	360 mm	330 mm
motor power	400 V / 50 Hz / 22 kW	400 V / 50 Hz / 37 kW	400 V / 50 Hz / 22 kW
roller speed	1,5 / 5 m/min	1,5 / 5 m/min	1,5 / 5 m/min
dimensions (L x D x H)	4.600 x 2.000 x 1.750 mm	4.600 x 2.100 x 1.850 mm	5.100 x 2.000 x 1.750 mm
weight	10.600 kg	12.650 kg	12.000 kg
	E-3RBM PRO HSS 2.050-30,0	**E-3RBM PRO HSS 2.050-35,0**	**E-3RBM PRO HSS 2.550-25,0**
EAN	**4260364291865**	**4260364291872**	**4260364291889**
Item No.	**356 2030**	**356 2035**	**356 2525**

Description	E-3RBM PRO HSS 2.550-30,0	E-3RBM PRO HSS 3.100-20,0	E-3RBM PRO HSS 3.100-25,0
roller length	max. 2.550 mm	max. 3.100 mm	max. 3.100 mm
sheet thickness (St 37)	max. 30,0 mm	max. 20,0 mm	max. 25,0 mm
diameter of the upper rolls	380 mm	350 mm	380 mm
diameter of the lower rolls	360 mm	330 mm	360 mm
motor power	400 V / 50 Hz / 37 kW	400 V / 50 Hz / 22 kW	400 V / 50 Hz / 37 kW
roller speed	1,5 / 5 m/min	1,5 / 5 m/min	1,5 / 5 m/min
dimensions (L x D x H)	5.100 x 2.100 x 1.850 mm	5.650 x 2.000 x 1.750 mm	5.650 x 2.100 x 1.850 mm
weight	13.900 kg	13.000 kg	15.300 kg
	E-3RBM PRO HSS 2.550-30,0	**E-3RBM PRO HSS 3.100-20,0**	**E-3RBM PRO HSS 3.100-25,0**
EAN	**4260364291896**	**4260364291902**	**4260364291919**
Item No.	**356 2530**	**356 3120**	**356 3125**

Description	E-3RBM PRO HSS 4.100-12,0	E-3RBM PRO HSS 4.100-16,0	E-3RBM PRO HSS 4.100-20,0
roller length	max. 4.100 mm	max. 4.100 mm	max. 4.100 mm
sheet thickness (St 37)	max. 12,0 mm	max. 16,0 mm	max. 20,0 mm
diameter of the upper rolls	350 mm	380 mm	420 mm
diameter of the lower rolls	330 mm	360 mm	400 mm
motor power	400 V / 50 Hz / 22 kW	400 V / 50 Hz / 37 kW	400 V / 50 Hz / 37 kW
roller speed	1,5 / 5 m/min	1,5 / 5 m/min	1,5 / 5 m/min
dimensions (L x D x H)	6.650 x 2.000 x 1.750 mm	6.950 x 2.100 x 1.850 mm	6.750 x 2.250 x 2.250 mm
weight	18.000 kg	17.950 kg	23.320 kg
	E-3RBM PRO HSS 4.100-12,0	**E-3RBM PRO HSS 4.100-16,0**	**E-3RBM PRO HSS 4.100-20,0**
EAN	**4260364291926**	**4260364291933**	**4260364291940**
Item No.	**356 4112**	**356 4116**	**356 4120**

E-4KRB-H 1.050-3,0 / E-4KRB-H 1.050-4,0

CONIC 4-ROLLER-ROUND BENDING MACHINES

4-Roller-Round Bending Machine

PREMIUM-LINE

PIC.: E-4KRB-H 1.050-3,0

E-4KRB-H 1.050-3,0 / E-4KRB-H 1.050-4,0

» the drive of the rolls is given by electric motor with planetary gear
» hydraulic upward and downward movement
» hydraulic bearing cap for easy removal of the rolled material
» entire operation via clear and mobile control panel
» digital display for roll position
» heavy welded steel construction
» central lubrication
» induction hardened, polished steel rolls (SAE-1050)

» bending performance data refer to 24 kg/m² sheet bending limit
» sheet thickness for stainless steel: factor 0,5
» sheet thickness for aluminum: factor 1,2

When ordering please name the type of material which will be used

Description	E-4KRB-H 1.050-3,0	E-4KRB-H 1.050-4,0
roller length	max. 1.050 mm	max. 1.050 mm
sheet thickness (St 37)	max. 3,0 mm	max. 4,0 mm
biggest roller Ø	155 mm	185 mm
smallest roller Ø	40 mm	70 mm
min. bending diameter	63 mm	105 mm
motor power	400 V / 50 Hz / 3,7 kW	400 V / 50 Hz / 5,5 kW
roller speed	5 m/min	5 m/min
dimensions (L x D x H)	3.200 x 1.150 x 1.100 mm	2.800 x 1.250 x 1.170 mm
weight	2.000 kg	2.500 kg
	E-4KRB-H 1.050-3,0	**E-4KRB-H 1.050-4,0**
EAN	**4260364296457**	**4260364296464**
Item No.	**357 1030**	**357 1040**

PIC. SHOWS AN EXAMPLE OF A FINAL PRODUCT

E-4RBM 1.050-5,0 / E-4RBM 1.550-4,0
E-4RBM 2.050-3,0

4-ROLLER-ROUND BENDING MACHINES

NEW

PREMIUM-LINE

PIC.: E-4RBM 1.550-4,0

E-4RBM 1.050-5,0 / E-4RBM 1.550-4,0
E-4RBM 2.050-3,0

- upper roller drive of the side and bottom roll; up and down movements are carried out with reduction gears
- manual folding bearing for easy removal of the rolled material
- control via mobile control panel
- heavy steel welded construction
- conical bending device
- induction-hardened rolls of forged steel

» bending performance data refer to 24 kg/m² sheet bending limit
» sheet thickness for stainless steel: factor 0,5
» sheet thickness for aluminum: factor 1,2

When ordering please name the type of material which will be used

Description	E-4RBM 1.050-5,0	E-4RBM 1.550-4,0	E-4RBM 2.050-3,0
roller length	max. 1.050 mm	max. 1.550 mm	max. 2.050 mm
sheet thickness (St 37)	max. 5,0 mm	max. 4,0 mm	max. 3,0 mm
diameter of the upper rolls	130 mm	130 mm	130 mm
diameter of the lower rolls	110 mm	110 mm	110 mm
motor power	400 V / 50 Hz / 2,2 kW	400 V / 50 Hz / 2,2 kW	400 V / 50 Hz / 2,2 kW
roller speed	5 m/min	5 m/min	5 m/min
dimensions (L x D x H)	2.500 x 900 x 850 mm	3.000 x 900 x 850 mm	3.500 x 900 x 850 mm
weight	1.300 kg	1.550 kg	1.900 kg
	E-4RBM 1.050-5,0	**E-4RBM 1.550-4,0**	**E-4RBM 2.050-3,0**
EAN	**4260364296471**	**4260364296488**	**4260364296495**
Item No.	**359 1055**	**359 1554**	**359 2053**

E-4RBM-H NC - MODELS

HYDRAULIC 4-ROLLER-ROUND BENDING MACHINES

NEW

PREMIUM-LINE

PIC.: E-4RBM-H NC 1.050-1,5

When ordering please name the type of material which will be used

E-4RBM-H NC - MODELS
WITH NC-CONTROL

» hydraulic drive of upper and side rolls, also for up and down movements
» hydraulic drop end for easy removal of the rolled sheets
» all operations controlled by functionally designed movable panel
» digital display for lower and side rolls
» welded heavy steel construction
» conic bending device
» central lubrication
» induction hardened rolls made of forged steel

Description	E-4RBM-H 1.050-1,5 NC	E-4RBM-H 1.050-2,5 NC
roller length	max. 1.050 mm	max. 1.050 mm
sheet thickness (St 37)	max. 1,5 mm	max. 2,5 mm
diameter of the central rolls	60 mm	90 mm
diameter of the side rolls	60 mm	100 mm
motor power	400 V / 50 Hz / 1,1 kW	400 V / 50 Hz / 2,2 kW
roller speed	4,5 m/min	4,5 m/min
dimensions (L x D x H)	2.050 x 875 x 1.060 mm	2.250 x 1.000 x 1.500 mm
weight	720 kg	900 kg
	E-4RBM-H 1.050-1,5 NC	**E-4RBM-H 1.050-2,5 NC**
EAN	**4260364296549**	**4260364296556**
Artikel-Nummer	**357 2015**	**357 1025**

Description	E-4RBM-H 1.050-5,0 NC	E-4RBM-H 1.550-2,0 NC	E-4RBM-H 1.550-4,0 NC
roller length	max. 1.050 mm	max. 1.550 mm	max. 1.550 mm
sheet thickness (St 37)	max. 5,0 mm	max. 2,0 mm	max. 4,0 mm
diameter of the central rolls	130 mm	90 mm	130 mm
diameter of the side rolls	110 mm	100 mm	110 mm
motor power	400 V / 50 Hz / 3 kW	400 V / 50 Hz / 2,2 kW	400 V / 50 Hz / 3 kW
roller speed	4,5 m/min	4,5 m/min	5 m/min
dimensions (L x D x H)	2.250 x 1.000 x 1.500 mm	2.750 x 1.000 x 1.500 mm	2.750 x 1.000 x 1.500 mm
weight	1.560 kg	1.100 kg	1.760 kg
	E-4RBM-H 1.050-5,0 NC	**E-4RBM-H 1.550-2,0 NC**	**E-4RBM-H 1.550-4,0 NC**
EAN	**4260364296563**	**4260364296570**	**4260364296587**
Item No.	**357 1050**	**357 1520**	**357 1540**

» bending performance data refer to 24 kg/m² sheet bending limit
» sheet thickness for stainless steel: factor 0,5
» sheet thickness for aluminum: factor 1,2

The machines are also available for other sheet thicknesses.

E-4RBM PRO HS - MODELS

MOTORIC 4-ROLLER-ROUND BENDING MACHINES

PREMIUM-LINE

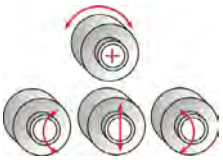

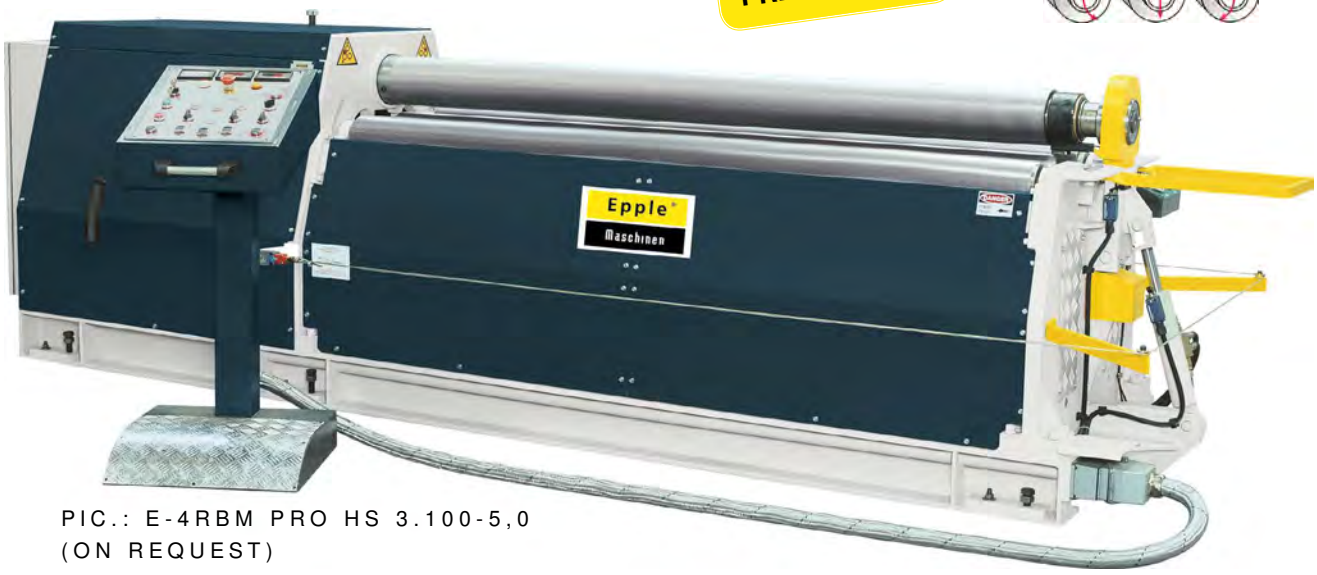

PIC.: E-4RBM PRO HS 3.100-5,0 (ON REQUEST)

E-4RBM PRO HS - MODELS

» hydraulic drive of upper and side rolls, also for up and down movements
» hydraulic drop end for easy removal of the rolled sheets
» all operations controlled by functionally designed movable panel
» digital display for lower and side rolls
» welded heavy steel construction
» conic bending device
» central lubrication
» induction hardened rolls made of forged steel

OPTIONAL EQUIPMENT

» NC control
» hydraulic support for large radius
» hydraulic side support

» bending performance data refer to 24 kg/m² sheet bending limit
» sheet thickness for stainless steel: factor 0,5
» sheet thickness for aluminum: factor 1,2

When ordering please name the type of material which will be used

Description	E-4RBM PRO HS 1.550-8,0	E-4RBM PRO HS 2.050-10,0	E-4RBM PRO HS 2.050-13,0	E-4RBM PRO HS 2.550-10,0	E-4RBM PRO HS 2.550-13,0
roller length	max. 1.550 mm	max. 2.050 mm	max. 2.050 mm	max. 2.550 mm	max. 2.550 mm
sheet thickness (St 37)	max. 8,0 mm	max. 10,0 mm	max. 13,0 mm	max. 10,0 mm	max. 13,0 mm
diameter of the central rolls	170 / 160 mm	220 mm	245 mm	245 mm	260 mm
diameter of the side rolls	150 mm	160 mm	180 mm	180 mm	200 mm
motor power	400 V / 50 Hz / 4 kW	400 V / 50 Hz / 5,5 kW	400 V / 50 Hz / 7,5 kW	400 V / 50 Hz / 7,5 kW	400 V / 50 Hz / 7,5 kW
roller speed	1,5 / 6 m/min	1,5 / 6 m/min	1,5 / 6 m/min	1,5 / 6 m/min	1,5 / 5 m/min
dimensions (L x D x H) in mm	3.600 x 860 x 1.150 mm	3.750 x 1.180 x 1.300 mm	4.000 x 1.550 x 1.500 mm	4.500 x 1.550 x 1.500 mm	4.500 x 1.590 x 1.600 mm
weight	2.500 kg	4.000 kg	5.100 kg	6.100 kg	6.740 kg
	E-4RBM PRO HS 1.550-8,0	**E-4RBM PRO HS 2.050-10,0**	**E-4RBM PRO HS 2.050-13,0**	**E-4RBM PRO HS 2.550-10,0**	**E-4RBM PRO HS 2.550-13,0**
EAN	**4260364291957**	**4260364291964**	**4260364291971**	**4260364291988**	**4260364291995**
Item No.	**357 1580**	**357 2010**	**357 2013**	**357 2510**	**357 2513**

The machines are also available for other sheet thicknesses.

E-4RBM PRO HSS - MODELS

MOTORIC 4-ROLLER-ROUND BENDING MACHINES

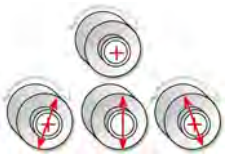

PREMIUM-LINE

PIC.: E-4RBM PRO HSS 3.100-20,0 (ON REQUEST)

E-4RBM PRO HSS - MODELS

» hydraulic drive of upper and side rolls, also for up and down movements
» side rolls in pyramid system (reliable parallelism for precise bending by the lower and side rolls)
» 2-speed levels to be chosen on the control panel
» digital display of both side rolls and lower roll
» hydraulic drop end for easy removal of the machined sheets
» all operations controlled by functionally designed movable panel
» conic bending device as standard
» central lubrication as standard
» induction hardened rolls made of forged steel

hydraulic device
» with high quality components (view without cover)

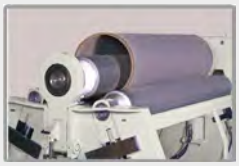

When ordering please name the type of material which will be used

» bending performance data refer to 24 kg/m² sheet bending limit
» sheet thickness for stainless steel: factor 0,5
» sheet thickness for aluminum: factor 1,2

Description	E-4RBM PRO HSS 2.050-20,0	E-4RBM PRO HSS 2.050-40,0	E-4RBM PRO HSS 2.050-60,0	E-4RBM PRO HSS 2.550-16,0
roller length	max. 2.050 mm	max. 2.050 mm	max. 2.050 mm	max. 2.550 mm
sheet theickness (St 37)	max. 20,0 mm	max. 40,0 mm	max. 60,0 mm	max. 16,0 mm
diameter of the central rolls	280 mm	380 mm	550 mm	280 mm
diameter of the side rolls	220 mm	300 mm	450 mm	220 mm
motor power	400 V / 50 Hz / 16,5 kW	400 V / 50 Hz / 31,5 kW	400 V / 50 Hz / 66,0 kW	400 V / 50 Hz / 16,5 kW
roller speed	1,5 / 5 m/min	1,5 / 5 m/min	1,0 / 4 m/min	1,5 / 5 m/min
dimensions (L x D x H)	4.850 x 1.700 x 1.850 mm	4.900 x 2.250 x 2.350 mm	5.700 x 2.900 x 2.950 mm	5.300 x 1.700 x 1.850 mm
weight	8.550 kg	15.800 kg	40.000 kg	9.200 kg
	E-4RBM PRO HSS 2.050-20,0	**E-4RBM PRO HSS 2.050-40,0**	**E-4RBM PRO HSS 2.050-60,0**	**E-4RBM PRO HSS 2.550-16,0**
EAN	**4260364296501**	**4260364296518**	**4260364296532**	**4260364296525**
Item No.	**358 2020**	**358 2040**	**358 2060**	**358 2516**

for more technical date check page 187.

OPTIONAL EQUIPMENT

» NC control
» hydraulic support for large radius
» hydraulic side support
» hydraulic tube ejection
» ground and polished rolls

E-4RBM PRO HSS - MODELS

TECHNICAL DATA

When ordering please name the type of material which will be used

Description	E-4RBM PRO HSS 2.550-20,0	E-4RBM PRO HSS 2.550-25,0	E-4RBM PRO HSS 3.100-12,0
roller length	max. 2.550 mm	max. 2.550 mm	max. 3.100 mm
sheet thickness (St 37)	max. 20,0 mm	max. 25,0 mm	max. 12,0 mm
diameter of the central rolls	320 mm	350 mm	280 mm
diameter of the side rolls	240 mm	260 mm	220 mm
motor power	400 V / 50 Hz / 20,0 kW	400 V / 50 Hz / 23,5 kW	400 V / 50 Hz / 16,5 kW
roller speed	1,5 / 5 m/min	1,5 / 5 m/min	1,5 / 5 m/min
dimensions (L x D x H)	5.400 x 1.800 x 1.950 mm	5.400 x 1.900 x 1.950 mm	5.850 x 1.700 x 1.850 mm
weight	11.750 kg	13.000 kg	10.000 kg
	E-4RBM PRO HSS 2.550-20,0	**E-4RBM PRO HSS 2.550-25,0**	**E-4RBM PRO HSS 3.100-12,0**
EAN	**4260364292008**	**4260364297232**	**4260364292015**
Item No.	**358 2520**	**358 2525**	**358 3112**

Description	E-4RBM PRO HSS 3.100-20,0	E-4RBM PRO HSS 3.100-25,0	E-4RBM PRO HSS 4.100-8,0
roller length	max. 3.100 mm	max. 3.100 mm	max. 4.100 mm
sheet thickness (St 37)	max. 20,0 mm	max. 25,0 mm	max. 8,0 mm
diameter of the central rolls	350 mm	380 mm	280 mm
diameter of the side rolls	260 mm	300 mm	220 mm
motor power	400 V / 50 Hz / 23,5 kW	400 V / 50 Hz / 31,5 kW	400 V / 50 Hz / 16,5 kW
roller speed	1,5 / 5 m/min	1,5 / 5 m/min	1,5 / 5 m/min
dimensions (L x D x H)	5.850 x 1.900 x 1.950 mm	5.850 x 2.250 x 2.350 mm	6.850 x 1.700 x 1.850 mm
weight	15.000 kg	18.800 kg	13.000 kg
	E-4RBM PRO HSS 3.100-20,0	**E-4RBM PRO HSS 3.100-25,0**	**E-4RBM PRO HSS 4.100-8,0**
EAN	**4260364292022**	**4260364292039**	**4260364292046**
Item No.	**358 3120**	**358 3125**	**358 4180**

The machines are also available for other sheet thicknesses.

E-4RBM PRO HMS - MODELS

HYDRAULIC 4-ROLLER-ROUND BENDING MACHINES

PREMIUM-LINE

PIC.: E-4RBM PRO HMS 650-3,5
(ON REQUEST: E-4RBM PRO HMS 1.550-8,0)

For technical data check page 189.

E-4RBM PRO HMS - MODELS

» hydraulic drive of upper and side rolls, also for up and down movements
» manual bearing cap for easy removal of the rolled sheets
» all operations controlled by functionally designed movable panel
» digital display of lower roll and both side rolls
» welded heavy steel construction
» conic bending device
» central lubrication
» induction hardened rolls made of forged steel

PIC.: E-4RBM PRO HMS 1.550-8,0
OPTIONAL WITH HYDRAULIC SUPPORT FOR LARGE RADIUS

When ordering please name the type of material which will be used

» bending performance data refer to 24 kg/m² sheet bending limit
» sheet thickness for stainless steel: factor 0,5
» sheet thickness for aluminum: factor 1,2

OPTIONAL EQUIPMENT

» NC control
» hydraulic support for large radius
» hydraulic side support
» hydraulic tube ejection
» ground and polished rolls

» bending performance data refer to 24 kg/m² sheet bending limit
» sheet thickness for stainless steel: factor 0,5
» sheet thickness for aluminum: factor 1,2

E-4RBM PRO HMS - MODELS

TECHNICAL DATA

Description	E-4RBM PRO HMS 650-3,5	E-4RBM PRO HMS 1.050-5,0	E-4RBM PRO HMS 1.270-3,0
roller length	max. 650 mm	max. 1.050 mm	max. 1.270 mm
sheet thickness (St 37)	max. 3,5 mm	max. 5,0 mm	max. 3,0 mm
diameter of the central rollers	80 mm	130 mm	100 mm
diameter of the side rollers	80 mm	130 mm	90 mm
motor power	400 V / 50 Hz / 1,9 kW	400 V / 50 Hz / 3,3 kW	400 V / 50 Hz / 1,9 kW
roller speed	5 m/min	5 m/min	6,5 m/min
dimensions (L x D x H)	1.950 x 950 x 960 mm	2.770 x 1.150 x 1.100 mm	2.570 x 950 x 960 mm
weight	950 kg	2.050 kg	1.350 kg
	E-4RBM PRO HMS 650-3,5	**E-4RBM PRO HMS 1.050-5,0**	**E-4RBM PRO HMS 1.270-3,0**
EAN	**4260364296594**	**4260364296600**	**4260364296617**
Item No.	**359 0635**	**359 1050**	**359 1230**

Description	E-4RBM PRO HMS 1.270-7,0	E-4RBM PRO HMS 1.270-10,0	E-4RBM PRO HMS 1.550-4,5
roller length	max. 1.270 mm	max. 1.270 mm	max. 1.550 mm
sheet thickness (St 37)	max. 7,0 mm	max. 10,0 mm	max. 4,5 mm
diameter of the central rollers	150 mm	200 mm	150 mm
diameter of the side rollers	130 mm	180 mm	130 mm
motor power	400 V / 50 Hz / 3,3 kW	400 V / 50 Hz / 4 kW	400 V / 50 Hz / 2,2 kW
roller speed	6 m/min	6 m/min	6 m/min
dimensions (L x D x H)	3.020 x 1.150 x 1.110 mm	3.070 x 1.350 x 1.290 mm	3.300 x 1.150 x 1.110 mm
weight	2.155 kg	3.000 kg	2.370 kg
	E-4RBM PRO HMS 1.270-7,0	**E-4RBM PRO HMS 1.270-10,0**	**E-4RBM PRO HMS 1.550-4,5**
EAN	**4260364296624**	**4260364299458**	**4260364299465**
Item No.	**359 1270**	**359 1210**	**359 1545**

The machines are also available for other sheet thicknesses.

E-4RBM PRO HMS - MODELS

HYDRAULIC 4-ROLLER-ROUND BENDING MACHINE

OPTIONAL SEMI- OR FULLY AUTOMATIC FOR SERIAL PRODUCTION

PIC.: E-4RBM PRO HMS
FULLY AUTOMATIC WITH ACCESSO-
RIES

E-4RBM PRO HMS - MODELS

Hydraulic 4-roller-round bending machine for processing light and medium plate thickness, also for aluminum and stainless steel.

» heavy and robust, welded construction
» drive top roller via electric motor and planetary gear
» drive clamping roller via cardan joint system
» overload protection
» linear infeed of the clamping and side rollers by means of hydraulic cylinder
» rolls induction hardened
» triple digital display of the roller position
» conical bending device
» hydraulic folding bearing for removal of finished parts
» mobile control panel

When ordering please name the type of material which will be used

» bending performance data refer to 24 kg/m² sheet bending limit
» sheet thickness for stainless steel: factor 0,5
» sheet thickness for aluminum: factor 1,2

OPTIONAL EQUIPMENT

» teach-in-control
» easy to operate 4-axis NC-control, expandable to 7 axes
» teach-In-Input
» 16 languages
» up to 1.000 programs can be stored via USB
» stepless adjustment of the bending speed
» double speed for automation
» grounded and polished rollers
» overhead crane for large diameters
» hydraulic lateral supports for large diameter
» material feeding system with vacuum lifter
» automatic bending via NC control
» ejector system

» bending performance data refer to 24 kg/m² sheet bending limit
» sheet thickness for stainless steel: factor 0,5
» sheet thickness for aluminum: factor 1,2

E-4RBM PRO HMS - MODELS

TECHNICAL DATA

Description	E-4RBM PRO HMS 1.550-12,0	E-4RBM PRO HMS 2.050-6,0	E-4RBM PRO HMS 2.050-10,0
roller length	max. 1.550 mm	max. 2.050 mm	max. 2.050 mm
sheet thickness (St 37)	max. 12,0 mm	max. 6,0 mm	max. 10,0 mm
diameter of upper/lower rollers	250 mm	180 mm	250 mm
diameter of the side rollers	200 mm	150 mm	200 mm
motor power	400 V / 50 Hz / 7,5 kW	400 V / 50 Hz / 4 kW	400 V / 50 Hz / 7,5 kW
roller speed	5 m/min	5 m/min	5 m/min
dimensions (L x D x H)	3.500 x 1.500 x 1.370 mm	3.850 x 1.350 x 1.290 mm	4.000 x 1.500 x 1.370 mm
weight	4.650 kg	3.300 kg	5.350 kg
	E-4RBM PRO HMS 1.550-12,0	**E-4RBM PRO HMS 2.050-6,0**	**E-4RBM PRO HMS 2.050-10,0**
EAN	**4260364299472**	**4260364299489**	**4260364299496**
Item No.	**359 1512**	**359 2060**	**359 2010**

Description	E-4RBM PRO HMS 2.550-4,0	E-4RBM PRO HMS 2.550-8,0	E-4RBM PRO HMS 3.100-7,0
roller length	max. 2.550 mm	max. 2.550 mm	max. 3.100 mm
sheet thickness (St 37)	max. 4,0 mm	max. 8,0 mm	max. 7,0 mm
diameter of upper/lower rollers	180 mm	250 mm	250 mm
diameter of the side rollers	150 mm	200 mm	200 mm
motor power	400 V / 50 Hz / 4 kW	400 V / 50 Hz / 7,5 kW	400 V / 50 Hz / 7,5 kW
roller speed	5 m/min	5 m/min	5 m/min
dimensions (L x D x H)	4.350 x 1.350 x 1.290 mm	4.500 x 1.500 x 1.370 mm	5.000 x 1.500 x 1.370 mm
weight	3.700 kg	6.100 kg	6.800 kg
	E-4RBM PRO HMS 2.550-4,0	**E-4RBM PRO HMS 2.550-8,0**	**E-4RBM PRO HMS 3.100-7,0**
EAN	**4260364299502**	**4260364299519**	**4260364299526**
Item No.	**359 2540**	**359 2580**	**359 3170**

The machines are also available for other sheet thicknesses.

PW 10 M / PW 30 / PW 30 HV

PROFILE ROLLER MACHINES

PIC.: PW 10 M

PIC.: PW 30

PIC.: PW 30 HV

PW 10 M / PW 30 / PW 30 HV

» solid frame made of cast iron
» drive over hand crank
» cog wheel milled of solid
» hardened and ground rollers
» arbors made of special steel, hardened and ground
» millimeter scale for adjusting the pressure rollers
» polished and double-based drive shafts that rotate in opposite tapered roller bearings
» central block in one piece sliding on hardened slide shoes
» the sliding blocks are housed on the machine frame
» longitudinal workpiece storage and alignment devices
» mechanical service, 2 slaving rollers

Description	PW 10 M	PW 30	PW 30 HV
axis diameter	30 mm	30 mm	30 mm
roller diameter	100 mm	118 - 148 mm	118 - 148 mm
head foldable for horizontal use	no	no	yes
motor power	-	400 V / 50 Hz / 1,1 kW	400 V / 50 Hz / 0,75 kW
dimensions (L x D x H)	-	4 U/min	4 U/min
weight	580 x 550 x 1.470 mm	620 x 480 x 1.360 mm	1.000 x 620 x 1.360 mm
Gewicht	158 kg	213 kg	224 kg
	PW 10 M	**PW 30**	**PW 30 HV**
EAN	**4260364292053**	**4260364292060**	**4260364292077**
Item No.	**225 0030**	**225 1030**	**225 1530**

PW 40 HV / PW 50

PROFILE ROLLER MACHINES

PIC.: PW 40 HV

PIC.: PW 50

PW 40 HV / PW 50

» heavy version
» millimetre scale for setting the printing rollers
» width for round steel, square steel and tubes up to 30mm stepless adjustable (with standard roller set supplied)
» grounded and double-supported drive shafts, which rotate in opposite taper bearings
» central block sliding on hardened sliding shoes from one piece
» the hardened and grounded glide shoes are accommodated on the machine frame
» longitudinal fixtures for workpiece deposit and alignment
» mechanical infeed, 2 driven rollers

Description	PW 40 HV	PW 50
axis diameter	40 mm	50 mm
roller diameter	126 - 168 mm	190 mm
head foldable for horizontal use	yes	no
motor power	400 V / 50 Hz / 1,5 kW	400 V / 50 Hz / 2,2 kW
dimensions (L x D x H)	1.560 x 1.240 x 860 mm	840 x 750 x 1.450 mm
weight	425 kg	450 kg
	PW 40 HV	**PW 50**
EAN	**4260364292176**	**4260364292268**
Item No.	**225 1540**	**225 1050**

ROLLER SETS

» **roller sets for specific dimensions on page 194**
» **optional sets of plastic rollers on request**

PW 30 / PW 30 HV

STANDARD ROLLER SETS

Profile	Dimensions in mm	min ø in mm	Roller-Set	Item No.
	40 x 40 x 3	1.000	Standard	**scope of delivery**
	50 x 15	350	Standard	**scope of delivery**
	50 x 30 x 3	1.200	Standard	**scope of delivery**

OPTIONAL STEEL ROLLER SETS

Profile	Dimensions in mm	min ø in mm	EAN	Item No.
	ø 15 ø 20 ø 25 ø 30	600	**4260364292084**	**550 1010**
	40 x 40 x 2 40 x 40 x 3 40 x 40 x 4 40 x 40 x 5	400	**4260364292091**	**550 1020**
	40 x 40 x 2 40 x 40 x 3 40 x 40 x 4 40 x 40 x 5	400	**4260364292107**	**550 1030**
	50 x 50 x 2 50 x 50 x 3 50 x 50 x 4 50 x 50 x 5	400	**4260364292114**	**550 1040**
	50 x 25 x 2 50 x 25 x 3 50 x 25 x 4 50 x 25 x 5	300	**4260364292121**	**550 1050**
	50 x 25 x 2 50 x 25 x 3 50 x 25 x 4 50 x 25 x 5	400	**4260364292138**	**550 1060**
	50 x 25 x 2 50 x 25 x 3 50 x 25 x 4 50 x 25 x 5	300	**4260364292145**	**550 1070**
	ø 35 x 2 ø 40 x 2 ø 45 x 2 ø 50 x 2 ø 55 x 2 ø 60 x 2	1.000	**4260364292152**	**550 1080**
plastic-roller sets: metric	up to 58 mm	up to 58 mm	**4260364292169**	**550 1090**
roller sets in inch on request				

STANDARD ROLLER SETS

Profile	Dimensions in mm	min ø in mm	Roller-Set	Item No.
	30 x 30 (stepless adjustable)	800	Standard	**scope of delivery**
	60 x 20	600	Standard	**scope of delivery**

OPTIONAL PLASTIC ROLLER SETS

Profile	Dimensions in mm	min ø in mm	Roller-Set	EAN	Item No.
	ø 35 ø 40 ø 45 ø 50	ab 500 (at ø 30 mm)	PW 40 Set 1 plastic rollers	**4260364292183**	**550 2010**
	40 x 40 x 2 40 x 40 x 3 40 x 40 x 4 40 x 40 x 5	700	PW 40 Set 2 plastic rollers	**4260364292190**	**550 2020**

Profile	Dimensions in mm	min ø in mm	Roller-Set	EAN	Item No.
	40 x 40 x 2 40 x 40 x 3 40 x 40 x 4 40 x 40 x 5	700	PW 40 Set 3 plastic rollers	**4260364292206**	**550 2030**
	50 x 50 x 2 50 x 50 x 3 50 x 50 x 4 50 x 50 x 5	700	PW 40 Set 4 plastic rollers	**4260364292213**	**550 2040**
	50 x 25 x 2 50 x 25 x 3 50 x 25 x 4 50 x 25 x 5	700	PW 40 Set 5 plastic rollers	**4260364292220**	**550 2050**
	50 x 25 x 2 50 x 25 x 3 50 x 25 x 4 50 x 25 x 5	700	PW 40 Set 6 plastic rollers	**4260364292237**	**550 2060**
	50 x 25 x 2 50 x 25 x 3 50 x 25 x 4 50 x 25 x 5	700	PW 40 Set 7 plastic rollers	**4260364292244**	**550 2070**
	ø 35 x 2 ø 40 x 2 ø 45 x 2 ø 50 x 2 ø 55 x 2 ø 60 x 2	from 600 (at ø 35 mm)	PW 40 Set 8 plastic rollers	**4260364292251**	**550 2080**

roller-sets for inch on request.

STANDARD ROLLER SETS

Profile	Dimensions in mm	min ø in mm	Roller-Set	Item No.
	35 x 35 20 x 20	600 780	Standard	**scope of delivery**
	100 x 15 60 x 10	920 1150	Standard	**scope of delivery**
	50 x 10 40 x 10	500 650	Standard	**scope of delivery**

OPTIONAL STEEL ROLLER SETS

Profile	Dimensions in mm	min ø in mm	Roller-Set
	ø 35 ø 30	600 650	PW 50 Set 1 steel rollers
	60 x 5 50 x 5	500 600	PW 50 Set 2 steel rollers
	60 x 5 50 x 5	700 700	PW 50 Set 3 steel rollers
	60 x 7 50 x 5	750 500	PW 50 Set 4 steel rollers
	60 x 7 50 x 5	750 700	PW 50 Set 5 steel rollers
	80 x 45 x 8 85 x 40 x 5	600 550	PW 50 Set 6 steel rollers
	80 x 45 x 6 85 x 40 x 5	650 550	PW 50 Set 7 steel rollers
	ø 30 x 2 ø 55 x 2 ø 35 x 2 ø 60 x 2 ø 40 x 2 ø 65 x 2 ø 45 x 2 ø 70 x 2 ø 50 x 2	600	PW 50 Set 8 steel rollers
plastic-roller sets: metric	up to 58 mm	up to 58 mm	
roller sets in inch on request			

E-PW 31 F / E-PW 35 F

PROFILE ROLLER MACHINES

PREMIUM-LINE

NEW

PIC.: E-PW 31 F

PIC.: E-PW 35 F

E-PW 31 F / E-PW 35 F
WITH FOOT CONTROL

» heavy and solid construction
» 2 powered rolls
» horizontally and vertically applicable
(**E-PW 31 F** only vertically)
» sideways mangle rolls, stepless
adjustable for spiral bending
» special hardened bending rolls
» hardened and ground shaft of special steel
» foot operating

Description	E-PW 31 F	E-PW 35 F
axis diameter	30 mm	50 mm
upper rolls - diameter	148 mm	155 mm
lower rolls - diameter	118 mm	155 mm
horizontal working	-	yes
speed	2 - 4 m/min	4,5 m/min
motor power	400 V / 50 Hz / 0,85 kW	400 V / 50 Hz / 1,5 kW
dimensions (L x D x H)	800 x 600 x 1.450 mm	750 x 1.000 x 1.400 mm
weight	220 kg	400 kg
	E-PW 31 F	**E-PW 35 F**
EAN	**4260364296631**	**4260364292275**
Item No.	**351 0031**	**351 0035**

E-PW 40 H /E-PW 50 H / E-PW 60 H

HYDRAULIC PROFILE ROLLER MACHINES

PREMIUM-LINE

PIC.: E-PW 40 H

PIC.: E-PW 50 H

PIC.: E-PW 60 H

E-PW 40 H /E-PW 50 H / E-PW 60 H
WITH FOOT CONTROL

» heavy construction
» hydraulic adjustment of the upper roll
» 3 driven rolls
» horizontal and vertical bending
(machine inclinable)
» hardened standard rolls
» shafts are hardened and ground
» stepless adjustable lateral rolls for spiral bending
» brake motor equipped
» control panel with foot control

The model E-PW 40 H is particularly suitable for smaller diameters and has 2 additional guide rollers.

Description	E-PW 40 H	E-PW 50 H	E-PW 60 H
axis diameter	40 mm	50 mm	60 mm
upper rolls - diameter	137 mm	152 mm	215 mm
lower rolls - diameter	137 mm	162 mm	215 mm
horizontal working	yes	yes	yes
speed	7 m/min	4,5 m/min	4 m/min
motor power	400 V / 50 Hz / 1,1 kW	400 V / 50 Hz / 1,1 kW	400 V / 50 Hz / 1,5 kW
dimensions (W x D x H)	1.050 x 530 x 1.250 mm	810 x 950 x 1.500 mm	1.000 x 1.400 x 1.650 mm
weight	350 kg	500 kg	950 kg
	E-PW 40 H	**E-PW 50 H**	**E-PW 60 H**
EAN	**4260364298420**	**4260364292282**	**4260364292299**
Item No.	**351 0040**	**351 0050**	**351 0060**

E-PW 70 H

HYDRAULIC PROFILE ROLLER MACHINE

NEW

PREMIUM-LINE

E-PW 70 H
WITH FOOT CONTROL

A machine with a special arrangement of the bottom rollers. These can be moved horizontally.
Due to the variable position of the lower rollers, 180-degree bends can also be inserted into long strips or pipes, e.g. cooling pipes, with little effort. The top roll can be used to calibrate and reroll previously bent parts just like a conventional workshop press.

» welded steel construction frame
» 3 driven rollers
» top roller with hydraulic feed
» bottom rollers horizontally adjustable
» hardened and grounded shafts made of high strength special steel
» horizontal and vertical operation (machine can be folded down)
» mobile control panel
» adjustable lateral guide rollers

Special accessories:
Rollers for tubes and profiles,
NC-control

Description	E-PW 70 H
upper axis diameter	60 mm
lower axis diameter	50 mm
roller diameter	180 mm
horizontal working	yes
speed	5 m/min
motor power	400 V / 50 Hz / 3 kW
dimensions (W x D x H)	850 x 1.200 x 1.200 mm
weight	1.000 kg

	E-PW 70 H
EAN	**4260364297805**
Item No.	**351 0070**

E-PW 65 H / E-PW 80 H

HYDRAULIC PROFILE ROLLER MACHINES

PREMIUM-LINE

PIC.: E-PW 65 H

PIC.: E-PW 80 H

E-PW 65 H / E-PW 80 H

» steel welded frame construction
» 3 driven rolls
» 2-level digital display (lower rolls)
» hardened and ground shaft made of high tensile special steel
» horizontal and vertical bending (machine inclinable)
» hardened roller sets as standard
» mobile control panel
» brake motor equipped
» side leveling rollers, adjustable for spiral bending

Description	E-PW 65 H	E-PW 80 H
upper axis diameter	60 mm	80 mm
lower axis diameter	50 mm	70 mm
roller diameter	180 mm	245 mm
horizontal working	yes	yes
speed	5 m/min	6 m/min
motor power	400 V / 50 Hz / 3 kW	400 V / 50 Hz / 4 kW
dimensions (W x D x H)	850 x 1.200 x 1.200 mm	1.000 x 1.450 x 1.400 mm
weight	1.000 kg	1.700 kg
	E-PW 65 H	**E-PW 80 H**
EAN	**4260364292305**	**4260364292312**
Item No.	**351 0065**	**351 0080**

E-PW 100 H / E-PW 120 H

HYDRAULIC PROFILE ROLLER MACHINES

PREMIUM-LINE

PIC.: E-PW 100 H

PIC.: E-PW 120 H

E-PW 100 H / E-PW 120 H

» steel welded frame construction
» 3 driven rolls
» 2-level digital display (lower rolls)
» hardened and ground shafts made of high tensile special steel
» horizontal and vertical bending (machine inclinable)
» hardened roller sets as standard
» mobile control panel
» stepless adjustable lateral rolls for spiral bending

Description	E-PW 100 H	E-PW 120 H
upper axis diameter	100 mm	120 mm
lower axis diameter	-	-
roller diameter	315 mm	390 mm
horizontal working	yes	yes
speed	7 m/min	2 - 7,5 m/min
motor power	400 V / 50 Hz / 7,5 kW	400 V / 50 Hz / 15 kW
dimensions (W x D x H)	1.450 x 2.000 x 1.700 mm	1.650 x 2.000 x 1.900 mm
weight	3.650 kg	4.770 kg
	E-PW 100 H	**E-PW 120 H**
EAN	**4260364292329**	**4260364294491**
Item No.	**351 0100**	**351 0120**

OPTIONAL EQUIPMENT

» tube and profile roller kits
» 3-axis hydraulic lateral guide rolls
» stepless driving speed adjustment

E-PW 160 H / E-PW 180 H

HYDRAULIC PROFILE ROLLER MACHINES

NEW

PREMIUM-LINE

PIC.: E-PW 180 H

E-PW 160 H / E-PW 180 H

» steel welded frame construction
» 3 driven rolls
» 2-level digital display (lower rolls)
» hardened and ground shafts made of high tensile special steel
» horizontal and vertical bending (machine inclinable)
» hardened roller sets as standard
» mobile control panel
» brake motor equipped
» stepless adjustable lateral rolls for spiral bending

OPTIONAL EQUIPMENT

» tube and profile roller kits
» stepless driving speed adjustment

Description	E-PW 160 H	E-PW 180 H
upper axis diameter	160 mm	180 mm
lower axis diameter	160 mm	180 mm
roller diameter	500 mm	580 mm
horizontal working	yes	yes
speed	3 - 6 m/min	3 - 6 m/min
motor power	400 V / 50 Hz / 22 kW	400 V / 50 Hz / 30 kW
dimensions (W x D x H)	2.350 x 2.500 x 2.600 mm	2.400 x 2.600 x 3.000 mm
weight	10.700 kg	12.000 kg

	E-PW 160 H	E-PW 180 H
EAN	**4260364294507**	**4260364298444**
Item No.	**351 0160**	**351 0180**

E-PW 200 H

HYDRAULIC PROFILE ROLLER MACHINES

PREMIUM-LINE

PIC.: E-PW 200 H

E-PW 200 H

» steel welded frame construction
» 3 driven rolls
» 2-level digital display (lower rolls)
» hardened and ground shafts made of high tensile special steel
» hardened roller sets as standard
» mobile control panel
» stepless adjustable lateral rolls for spiral bending

Description	E-PW 200 H
upper axis diameter	200 mm
roller diameter	650 mm
horizontal working	yes
speed	2 - 5 m/min
motor power	400 V / 50 Hz / 30 kW
dimensions (L x D x H)	3.400 x 2.400 x 2.300 mm
weight	15.000 kg
	E-PW 200 H
EAN	**4260364294514**
Item No.	**351 0200**

OPTIONAL EQUIPMENT

» tube and profile roller kits
» stepless driving speed adjustment

E-PW 240 H / E-PW 360 H

HYDRAULIC PROFILE ROLLER MACHINES

PREMIUM-LINE

PIC.: E-PW 240 H

E-PW 240 H / E-PW 360 H

» steel welded frame construction
» 3 hydraulically driven rolls by planetary gear
» 2-level digital display (lower rolls)
» hardened roller sets as standard
» hardened and ground shafts
» mobile control panel

OPTIONAL EQUIPMENT

» tube and profile roller kits
» stepless driving speed adjustment

Description	E-PW 240 H	E-PW 360 H
upper axis diameter	240 mm	360 mm
roller diameter	700 mm	850 mm
speed	2 - 4 m/min	2 - 4 m/min
motor power	400 V / 50 Hz / 44 kW	400 V / 50 Hz / 77 kW
dimensions (L x D x H)	4.200 x 2.950 x 3.200 mm	4.750 x 3.300 x 3.400 mm
weight	28.500 kg	55.000 kg
	E-PW 240 H	**E-PW 360 H**
EAN	**4260364296648**	**4260364296655**
Item No.	**351 1240**	**351 1360**

More sizes are available on request.

E-PW 35 F / E-PW 50 H / E-PW 60 H

ROLLER SETS

STANDARD ROLLER SETS

Profile	E-PW 35 F Dimensions	E-PW 35 F min ø in mm	E-PW 50 H Dimensions	E-PW 50 H min ø in mm	E-PW 60 H Dimensions	E-PW 60 H min ø in mm
	60 x 10 40 x 10	500 400	60 x 10 20 x 10	600 300	80 x 20 40 x 10	1.200 400
	100 x 15 60 x 10	450 350	100 x 15 50 x 10	600 300	120 x 25 50 x 10	600 400
	35 x 35 20 x 20	900 300	35 x 35 15 x 15	600 300	50 x 50 20 x 20	800 400
	60 x 7 50 x 6	700 500	60 x 7 30 x 4	800 500	80 x 9 40 x 5	1.000 400
	60 x 7 50 x 6	700 500	50 x 6 30 x 4	800 500	80 x 9 40 x 5	1.200 500
	60 x 7 50 x 6	700 500	60 x 7 30 x 4	800 500	80 x 9 40 x 5	1.000 400
	UPN 80 UPN 60	1.000 700	UPN 80 UPN 30	800 400	UPN 120 UPN 60	800 500
	UPN 80 UPN 30	1.200 800	UPN 80 UPN 30	1.200 600	UPN 120 UPN 60	1.200 600

OPTIONAL ROLLER SETS MADE OF STEEL

Profile	E-PW 35 F Dimensions	E-PW 35 F min ø in mm	E-PW 50 H Dimensions	E-PW 50 H min ø in mm	E-PW 60 H Dimensions	E-PW 60 H min ø in mm
	ø 35 ø 30	600 400	ø 35 ø 20	600 300	ø 50 ø 20	800 400
	ø 70 x 2 ø 30 x 2	1.000 500	ø 70 x 2 ø 25 x 1,5	1.200 400	ø 100 x 2 ø 60 x 2	1.600 500
	2" x 2,9 1" x 2,3	1.000 350	2" x 2,9 1/2" x 2,3	1.000 300	3" x 3,2 1" x 2,6	1.600 500
	70 x 30 x 2 50 x 40 x 3	1.200 1.200	70 x 30 x 3 30 x 15 x 2	1.500 400	80 x 40 x 3 40 x 20 x 2	1.400 500
	50 x 3 40 x 3	1.700 600	50 x 3 20 x 2	1.600 400	70 x 3 40 x 2	1.600 500
	50 x 50 x 5 40 x 40 x 5	1.000 600	50 x 50 x 6 30 x 30 x 3	600 400	70 x 70 x 7 40 x 40 x 5	1.000 500
	50 x 50 x 6 30 x 30 x 3	1.000 500	50 x 50 x 6 30 x 30 x 3	900 600	70 x 70 x 7 40 x 40 x 5	1.200 600

PLASTIC ROLLS FOR BENDING STAINLESS STEEL ARE AVAILABLE ON REQUEST.

E-PW 65 H / E-PW 80 H / E-PW 100 H

ROLLER SETS

STANDARD ROLLER SETS

Profile	E-PW 65 H Dimensions	E-PW 65 H min ø in mm	E-PW 80 H Dimensions	E-PW 80 H min ø in mm	E-PW 100 H Dimensions	E-PW 100 H min ø in mm
	60 x 10 20 x 5	500 250	100 x 20 80 x 20 30 x 10	2.000 800 300	100 x 20 30 x 10	800 400
	80 x 20 50 x 5	500 250	125 x 25 60 x 5	600 300	200 x 30 160 x 35 80 x 5	1.200 800 400
	32 x 32 12 x 12	400 250	45 x 45 15 x 15	500 380	60 x 60 15 x 15	750 400
	60 x 7 20 x 3	550 250	80 x 9 25 x 3,5	800 450	90 x 10 30 x 4	1.000 400
	50 x 6 20 x 3	500 250	UPN 140 UPN 120 UPN 100	1.600 900 800	UPN 180 UPN 30 UPN 180	900 400 1.000
	60 x 70 20 x 3	500 250	80 x 9 30 x 4	800 300	100 x 11 30 x 4	1.000 400
	UPN 80 UPN 30	600 250	80 x 9 30 x 4	800 280	100 x 11 30 x4	1.000 400
	UPN 65 UPN 30	600 250	UPN 140 UPN 120 UPN 100	1.600 1.000 800	UPN 30 IPN 180 IPN 80	1.000 1.000 400

OPTIONAL ROLLER SETS MADE OF STEEL

Profile	E-PW 65 H Dimensions	E-PW 65 H min ø in mm	E-PW 80 H Dimensions	E-PW 80 H min ø in mm	E-PW 100 H Dimensions	E-PW 100 H min ø in mm
	ø 35 ø 10	350 250	ø 50 ø 15	500 380	ø 75 ø 15	800 450
	ø 60 x 2 ø 15 x 1,5	600 200	ø 100 x 2,5 ø 15 x 1	1.200 380	ø 125 x 2,5 ø 15 x 1	1.400 450
	2" x 3,91 1/2" x 2,77	400 200	3" x 5,48 1/2" x 2,77	800 380	4" x 4,5 1/2" x 2,77	2.500 450
	50 x 25 x 3 20 x 15 x 2	450 250	80 x 25 x 3 25 x 15 x 2	800 350	100 x 40 x 4 25 x 15 x 2	1.300 450
	45 x 3 20 x 2	600 300	70 x 3 25 x 2	1.300 350	80 x 5 25 x 2	1.500 450
	60 x 60 x 6 30 x 30 x 4	650 350	80 x 80 x 8 30 x 30 x 3	800 400	100 x 100 x 12 40 x 40 x 4	1.000 700
	50 x 50 x 5 30 x 30 x 4	550 350	70 x 70 x 7 30 x 30 x 3	700 450	100 x 100 x 10 40 x 40 x 4	1.500 550

PLASTIC ROLLS FOR BENDING STAINLESS STEEL ARE AVAILABLE ON REQUEST.

E-PW 120 H / E-PW 160 H / E-PW 200 H

ROLLER SETS

STANDARD ROLLER SETS

Profile	E-PW 120 H Dimensions	E-PW 120 H min ø in mm	E-PW 160 H Dimensions	E-PW 160 H min ø in mm	E-PW 200 H Dimensions	E-PW 200 H min ø in mm
	125 x 25 30 x 10	1.200 500	150 x 40 50 x 10	2.500 700	200 x 50	3.500
	200 x 50 100 x 10	1.000 500	280 x 50 120 x 15	1.500 700	350 x 80	2.500
	65 x 65 20 x 20	750 500	90 x 90 30 x 30	1.500 700	120 x 120	3.000
	100 x 11 30 x 4	800 500	150 x 15	2.000	200 x 20	3.500
	100 x 11 30 x 4	1.000 500	UPN 300	2.000	200 x 20	3.500
	UPN 220 UPN 180 UPN 40	1.000 800 500	150 x 15	2.000	UPN 380	3.000
	UPN 220 UPN 180 UPN 40	1.200 900 600	UPN 300	2.500	UPN 300	2.500

E-PW 240 H / E-PW 360 H

ROLLER SETS

STANDARD ROLLER SETS

Profile	E-PW 240 H Dimensions	E-PW 240 H min ø in mm	E-PW 360 H Dimensions	E-PW 360 H min ø in mm
	200 x 70	3.800	300 x 100	3.000
	380 x 80	2.500	550 x 120	3.000
	130 x 130	2.500	200 x 200	3.000
	200 x 28	3.000	250 x 25	4.000
	200 x 20	3.500	250 x 25	5.000
	UPN 450	3.000	UPN 600	4.000
	UPN 450	3.500	UPN 600	4.500

For all machines of the E-PW series special rollers can be manufactured optionally.

E-4PW 40 H / E-4PW 70 H
E-4PW 90 H / E-4PW 110 H

HYDRAULIC PROFILE ROLLER MACHINES

NEW

PREMIUM-LINE

Description	E-4PW 70 H	E-4PW 90 H	E-4PW 110 H
axis diameter	70 mm	90 mm	110 mm
roller diameter	200 mm	260 mm	320 mm
horizontal working	yes	yes	yes
speed	8 m/min	6,37 m/min	4,98 m/min
motor power	400 V / 50 Hz / 3 kW	400 V / 50 Hz / 5,5 kW	400 V / 50 Hz / 7,5 kW
dimensions (L x D x H)	1.200 x 1.100 x 800 mm	1.700 x 1.450 x 1.200 mm	2.000 x 1.700 x 1.250 mm
weight	1.400 kg	2.800 kg	4.500 kg

	E-4PW 70 H	E-4PW 90 H	E-4PW 110 H
EAN	**4260364296662**	**4260364296679**	**4260364296686**
Item No.	**351 2070**	**351 2090**	**351 2110**

E-4PW 70 H / E-4PW 90 H / E-4PW 110 H

ROLLER SETS

Profil Typ	E-4PW 70 H		E-4PW 90 H		E-4PW 110 H		
	Size	Min Ø	Size	Min Ø	Size	Min Ø	
	60 x 10 20 x 5	500 250	100 x 20 80 x 20 30 x 10	2.000 800 300	100 x 20 30 x 10	800 400	Standard
	80 x 20 50 x 5	500 250	125 x 25 60 x 5	600 300	200 x 30 160 x 35 80 x 5	1.200 800 400	Standard
	32 x 32 12 x 12	400 250	45 x 45 15 x 15	500 380	60 x 60 15 x 15	750 400	Standard
	Ø 35 Ø 10	350 250	Ø 50 Ø 15	500 380	Ø 75 Ø 15	800 450	Optional
	Ø 60 x 2 Ø 15 x 1,5	600 200	Ø 100 x 2,5 Ø 15 x 1	1.200 380	Ø 120 x 2,5 Ø 15 x 1	1.400 450	Optional
	Ø 2" x 3,91 Ø 1/2" x 2,77	400 200	Ø 3" x 5,48 Ø 1/2" x 2,77	800 380	Ø 4" x 6,02 Ø 1/2" x 2,77	1.000 450	Optional
	50 x 25 x 3 20 x 15 x 2	450 250	80 x 25 x 3 25 x 15 x 2	800 350	100 x 40 x 4 25 x 15 x 2	1.300 450	Optional
	45 x 3 20 x 2	600 300	70 x 3 25 x 2	1.300 400	80 x 5 25 x 2	1.500 450	Optional
	60 x 60 x 6 30 x 30 x 4	650 350	80 x 80 x 8 30 x 30 x 3	800 450	100 x 100 x 12 40 x 40 x 4	1.000 700	Optional
	50 x 50 x 5 30 x 30 x 4	550 350	70 x 70 x 7 30 x 30 x 3	700 460	100 x 100 x 10 40 x 40 x 4	1.000 550	Optional
	60 x 7 20 x 3	550 250	80 x 9 25 x 3,5	800 280	100 x 11 30 x 4	1.000 400	Standard
	50 x 6 20 x 3	500 250	70 x 8 25 x 3,5	800 280	90 x 10 30 x 4	1.000 400	Standard
	60 x 70 20 x 3	500 250	80 x 9 30 x 4	800 300	100 x 11 30 x 4	1.000 400	Optional
	UPN 80 UPN 30	600 250	UPN 140 UPN 120 UPN 100	1.600 900 600	UPN 180 UPN 30	900 400	Standard
	UPN 65 UPN 30	600 250	UPN 140 UPN 120 UPN 100	1.600 1.000 800	UPN 180 UPN 30	1.000 400	Standard
	IPN 80	600	IPN 120 IPN 80	600 400	IPN 180 IPN 80	1.000 400	Optional

PLASTIC ROLLS FOR BENDING STAINLESS STEEL ARE AVAILABLE ON REQUEST.

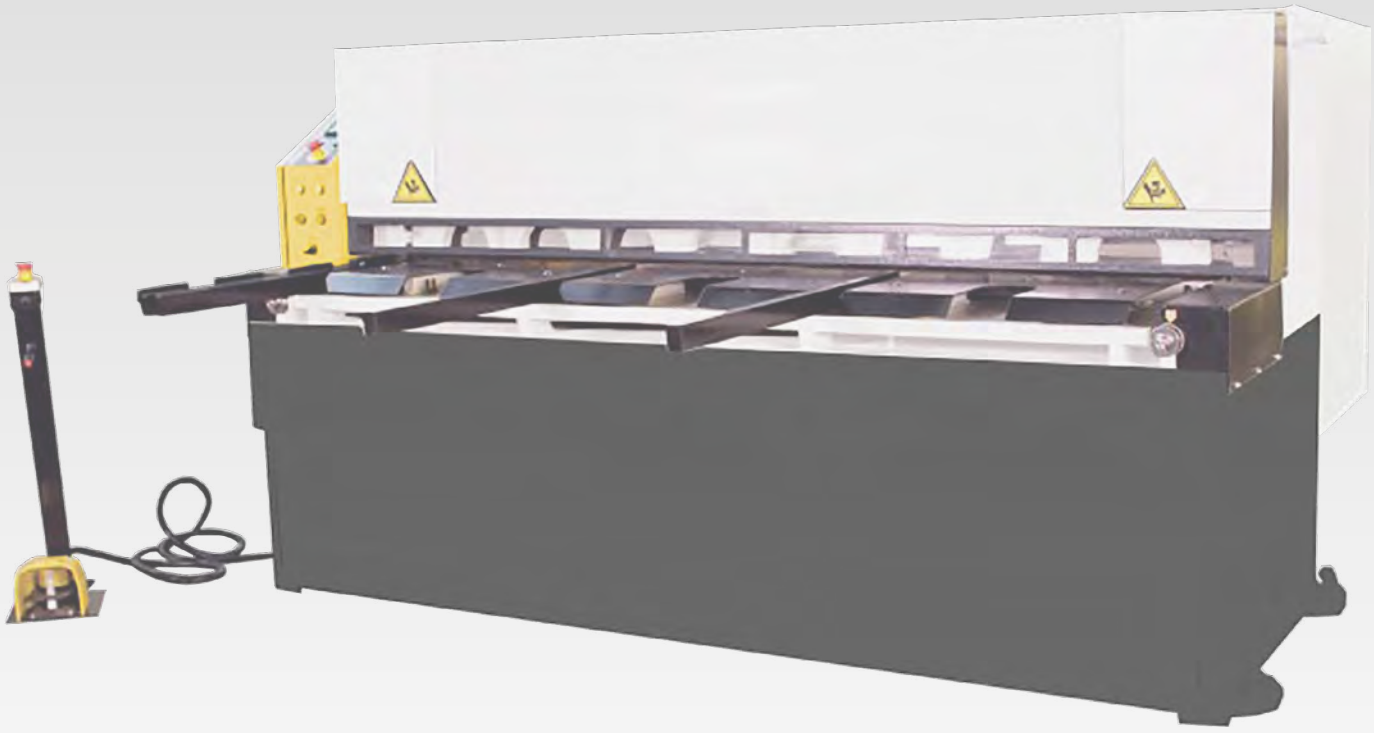

Cutting Machines

EK 1 / EK 2 / EK 3 / EK 8-E

NOTCHING MACHINES FOR PIPES

PIC.: EK 2

PIC.: EK 8-E

EK 1 / EK 2 / EK 3 / EK 8-E
FÜR VERSCHIEDENE DURCHMESSER

» from mild steel to high grade steel and other pipes to 3 mm wall thickness
» different rolls dia in one unit
» high productiveness with low investment
» clear edges, so there is no rework necessary
» low force required due to eccentric shaft (**EK 1 - 3**)
» motorized notching cut (nur bei Modell **EK 8-E**)

EXAMPLE OF USE

Description	EK 1	EK 2	EK 3	EK 8-E
outer diameter of the tube	1/4", 3/8", 1/2"	3/4", 1", 1-1/4"	1-1/2", 2"	1/4" bis 2"
max. wall thickness	3 mm	3 mm	3 mm	3 mm
weight	6 kg	8 kg	15 kg	98 kg

	EK 1	EK 2	EK 3	EK 8-E
EAN	**4260364292367**	**4260364292374**	**4260364292381**	**426036429736**
Item No.	**225 1001**	**225 1002**	**225 1003**	**325 1008**

AM 4T / AM 4T-3,0 / AM 4PT

MANUAL NOTCHING MACHINE

PIC.: AM 4T

AM 4T / AM 4T-3,0 / AM 4PT
WITH MAX. 4 TONS PISTON PRESSURE

» solid punching machine with high pressure
» free of burrs cut by precision cutting edge from high - quality steel
» universally adjustable stop for the serial production
» for cutting of corners, forms etc.
» body is of steel construction
» no deflection of the cutting edge is possible

Model AM 4 PT (floor model) without hand lever, operation via foot pedal

Description	AM 4T	AM 4T - 3,0	AM 4PT
max. sheet thickness	1,5 mm	3,0 mm	1,5 mm
max. stamp length	152 x 152 mm	100 x 100 mm	80 x 80 mm
cutting angle	90°	90°	90°
cutting pressure	20 mm	30 mm	25 mm
table size	460 x 310 mm	460 x 300 mm	310 x 310 mm
dimensions (L x D x H)	530 x 520 x 580 mm	460 x 450 x 760 mm	550 x 400 x 1.200 mm
weight	75 kg	105 kg	90 kg
	AM 4T	**AM 4T - 3,0**	**AM 4PT**
EAN	**4260364292398**	**4260364299540**	**4260364298451**
Item No.	**225 1040**	**225 3040**	**225 2040**

E-HAM 6 V

HYDRAULIC NOTCHING MACHINE

PREMIUM-LINE

PIC.: E-HAM 6 V

OPTIONAL

» rear hole punching unit

EXAMPLE OF USE

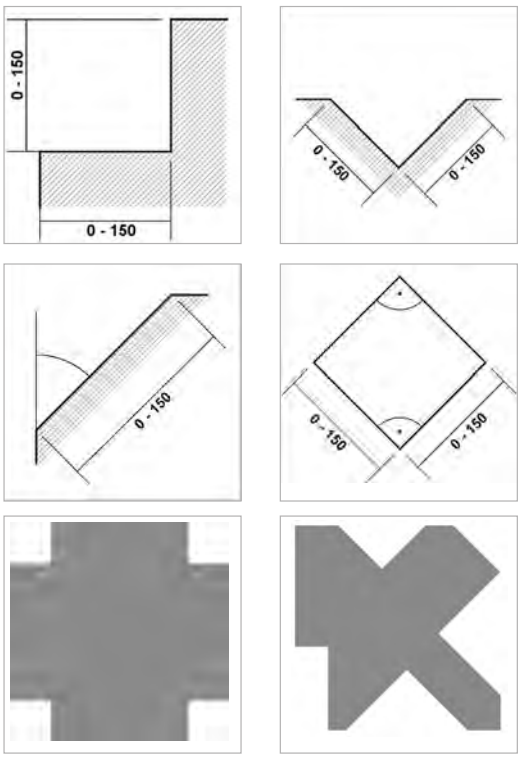

Description	E-HAM 6 V
sheet thickness - ST 37	6 mm (60 - 140°) 4 mm (30 - 59°)
sheet thickness - stainless steel	3 mm (60 - 140°) 2,5 mm (30 - 59°)
table size	1.150 x 610 mm
cutting angle	30 - 140°
max. cutting operations	30 per min.
max. punching length	200 x 200 mm
oil tank	35 Liter
cutting pressure	200 bar
motor power	4 kW
dimensions (L x D x H)	1.150 x 1.100 x 1.400 mm
weight	1.150 kg

	E-HAM 6 V
EAN	**4260364296693**
Item No.	**353 1006**

Under the designation E-HAM 6 VS, the machine is also available with a rear punching unit on request.

E-KS 1,8 M

CIRCULAR SHEAR

NEW

PREMIUM-LINE

E-KS 1,8 M

Electric circular shears for cutting various materials.

» workpiece clamping and measuring setting manually
» extremely stable and robust welded construction
» knife made of special steel K2379, bronze bearing
» knives are hardened, adjustable and regrindable
» geared motor with brake system
» central lubrication
» very good value of money

OPTIONAL EQUIPMENT

» pneumatic clutch system

Description	E-KS 1,8 M
sheet thickness (St 42)	max. 2,0 mm
min. workpiece diameter	100 mm
max. workpiece diameter	1.000 mm
cutting speed	7,5 m/min
motor power	1,1 kW
working range	700 mm
hump depth	280 mm
dimensions (L x D x H)	1.350 x 400 x 1.300 mm
weight	220 kg
	E-KS 1,8 M
EAN	**4260364296709**
Item No.	**353 1018**

E-KS 3,5 M / E-KS 5 M

CIRCULAR SHEARS

PREMIUM-LINE

PIC.: E-KS 3,5 M

E-KS 3,5 M / E-KS 5 M

Electric circular shears for cutting various materials.

» workpiece clamping hydraulically, measuring setting manual (E-KS 3,5 M)
» workpiece clamping and hydraulic adjustment (E-KS 5 M)
» extremely stable and robust welded construction
» knife made of special steel K2379, bronze bearing
» knives are hardened, adjustable and regrindable
» geared motor with brake system
» central lubrication
» hydraulic driven sheet centering system
» very good value of money

Description	E-KS 3,5 M	E-KS 5 M
sheet thickness (St 37)	max. 3,5 mm	max. 5,0 mm
min. workpiece diameter	200 mm	250 mm
max. workpiece diameter	1.200 mm	2.000 mm
cutting speed	6,1 m/min	4,1 m/min
motor power	400 V / 50 Hz / 2,2 kW	400 V / 50 Hz / 2,2 kW
working range	750 mm	880 mm
hump depth	250 mm	300 mm
dimensions (L x D x H)	2.000 x 600 x 1.400 mm	3.000 x 750 x 1.400 mm
weight	750 kg	1.350 kg
	E-KS 3,5 M	**E-KS 5 M**
EAN	**4260364294521**	**4260364294538**
Item No.	**353 1035**	**353 1050**

HS 125 / HS 150 / HS 300

HAND LEVER SHEARS

PIC.: HS 125 PIC.: HS 300

HS 125 / HS 150 / HS 300

» for cutting of sheets and sheet profiles
» in the top knife stands an admission bore for sectioning of round material
» across the complete cut length power gentle and easy separating
» the workpart is positioned by an adjustable hold down clamp
» shear is assured by a strong spring against independent closing
» solid hand grip assures a safe operation
» ergonomic cutting geometry
» fixed cutters
» robust shear body
» stable pedestal with fixing bores

Description	HS 125	HS 150	HS 300
round material	Ø 11 mm	Ø 11 mm	Ø 13 mm
material length	90 mm	125 mm	180 mm
material thickness	4 mm	5 mm	4 mm
weight	9 kg	10 kg	26 kg
	HS 125	**HS 150**	**HS 300**
EAN	**4260364292404**	**4260364292411**	**4260364292428**
Item No.	**226 0125**	**226 0150**	**226 0300**

Description	spare plate for HS 125	spare plate for HS 150	spare plate for HS 300
EAN	**4260364292435**	**4260364292442**	**4260364292459**
Item No.	**547 0125**	**547 0150**	**547 0300**

TFS 1.050-1,0

LEVER SHEARS

TFS 1.050-1,0

UNIVERSAL SHEAR FOR METAL, PAPER AND OTHER MATERIALS

» heavy duty cast iron construction
» retraction of blade over spring
» with manual holding down clamp for perfect achievement
» large work table
» centre console
» adjustable parallel limit stop by hand crank
» very good price performance ratio

» cutting performance data refer to 24 kg/m² sheet bending limit
» sheet thickness for stainless steel: factor 0,5
» sheet thickness for aluminum: factor 1,2

Description	TFS 1.050-1,0
sheet thickness	max. 1 mm
working width	1.000 mm
dimensions (L x D x H)	1.500 x 1.275 x 1.500 mm
weight	240 kg

	TFS 1.050-1,0
EAN	**4260364292473**
Item No.	**225 0715**

E-TFS 1.050-1,5 / E-TFS 1.350-1,5

LEVER SHEARS

PREMIUM-LINE

PIC.: E-TFS 1.050-1,5

Heavy cast design, no welded construction.

E-TFS 1.050-1,5 / E-TFS 1.350-1,5

UNIVERSAL SHEAR FOR SHEETS AND OTHER MATERIALS

- ideal for industry and craftsmen
- high quality converting
- for steel discs up to 1,5 mm
- with variable holding down clamp for a perfect achievement
- large working table
- heavy cast iron construction, no welded construction

Description	E-TFS 1.050-1,5	E-TFS 1.350-1,5
Blade length	1.050 mm	1.350 mm
sheet thickness	max. 1,5 mm	max. 1,5 mm
working width	1.000 mm	1.300 mm
table size	600 x 1.270 mm	600 x 1.570 mm
dimensions (L x D x H)	1.980 x 840 x 1.160 mm	2.280 x 840 x 1.160 mm
weight	420 kg	510 kg

» cutting performance data refer to 24 kg/m² sheet bending limit
» sheet thickness for stainless steel: factor 0,5
» sheet thickness for aluminum: factor 1,2

	E-TFS 1.050-1,5	E-TFS 1.350-1,5
EAN	**4260364297218**	**4260364297225**
Item No.	**353 1051**	**353 1350**

E-MTSK-MODELLE

MOTORIC GUILLOTINE SHEAR WITH CUTTING EMISSION REAR OR FRONT

PREMIUM-LINE

PIC.: E -MTSK 3.060-4,0

E-MTSK-MODELS

Ideal when space is limited or when mainly small parts are cut

» support table with ball rollers, T-slots and lateral stop with scale
» automatic hold-down-device for fixing sheet metal
» cut-line lightning with silhouette
» cutting gap adjustment in the front
» cutting knife made of tool steel with two cutting edges
» backgauge with recirculating ballscrews
» pneumatic sheet holding device
» sheet metal ejection optionally at the front or rear of the machine
» mobile foot pedal and emergency stop button

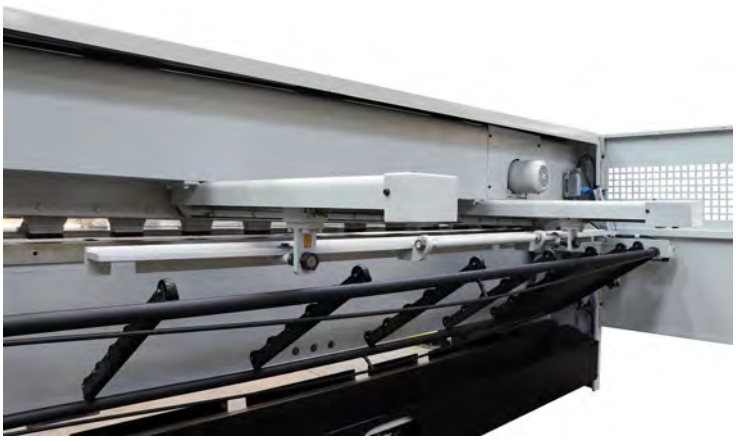

PIC.: E -MTSK 3.060-4,0 REAR VIEW
(SHEET EJECTION FORWARD)

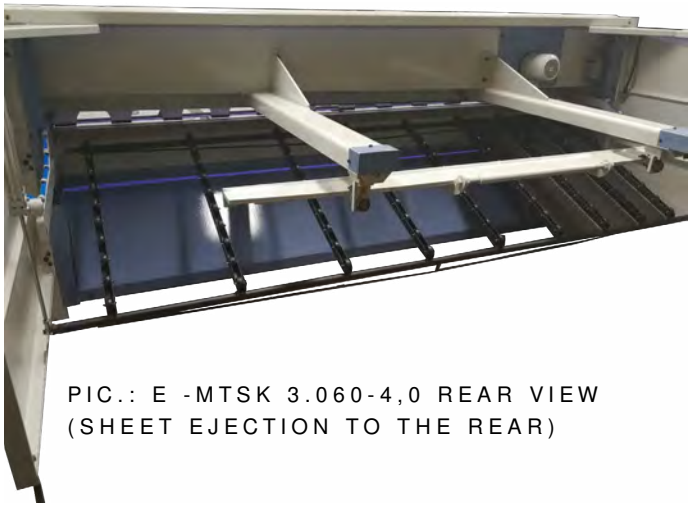

PIC.: E -MTSK 3.060-4,0 REAR VIEW
(SHEET EJECTION TO THE REAR)

» bending performance data refer to 24 kg/m² sheet bending limit
» sheet thickness for stainless steel: factor 0,5
» sheet thickness for aluminum: factor 1,2

Description	E-MTSK 1.100-6,0	E-MTSK 1.560-5,0	E-MTSK 2.060-4,0	E-MTSK 2.560-4,0	E-MTSK 3.060-4,0
working length	1.100 mm	1.560 mm	2.060 mm	2.560 mm	3.060 mm
max. thickness	6 mm	5 mm	4 mm	2 mm	4 mm
cutting angle	2°	2°	1°30°	1°30°	1°30°
strokes per minute	31	31	31	31	31
table height	800 mm	800 mm	830 mm	800 mm	830 mm
backgauge	0-750 mm	0-750 mm	0-750 mm	0-750 mm	0-750 mm
working width	455 mm	455 mm	455 mm	455 mm	450 mm
motor power	400 V / 50 Hz / 7,5 kW	400 V / 50 Hz / 7,5 kW	400 V / 50 Hz / 7,5 kW	400 V / 50 Hz / 7,5 kW	400 V / 50 Hz / 7,5 kW
dimension (L x D x H)	1.750 x 2.250 x 1.400 mm	2.300 x 2.250 x 1.400 mm	2.800 x 2.250 x 1.400 mm	3.225 x 2.250 x 1.400 mm	3.770 x 2.250 x 1.400 mm
weight	2.000 kg	2.500 kg	3.000 kg	3.500 kg	4.000 kg
	E-MTSK 1.100-6,0	**E-MTSK 1.560-5,0**	**E-MTSK 2.060-4,0**	**E-MTSK 2.560-4,0**	**E-MTSK 3.060-4,0**
EAN	**4260364299557**	**4260364299564**	**4260364299571**	**4260364299588**	**4260364299595**
Item No.	**340 8116**	**340 8155**	**340 8204**	**340 8254**	**340 8304**

E-MTBS-MODELS

MOTORIC GUILLOTINE SHEARS

PREMIUM-LINE

PIC.: E -MTBS 1.350-3,0

Motor-driven guillotine shears for material thicknesses up to 4 mm for cutting metals and other materials in sheet form. Motor, brake system with coolant system and clutch bell enable quiet operation and energy consumption has been reduced to a minimum.

E-MTBS-MODELS

- » high-quality, heavy and stable welded steel construction
- » backgauge manual 750 mm travel with ball screw drive
- » safety system in the rear area
- » finger protection barrier
- » LED-working light in the cutting area
- » operation via foot pedal
- » hardened knife that can be used on both sides
- » emergency stop switch with mobile foot pedal
- » sheet metal handle arms

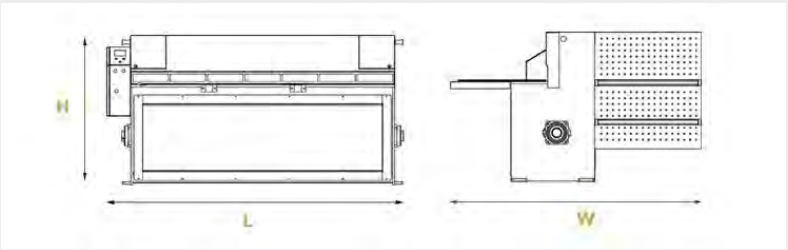

» cutting performance data refer to 24 kg/m² sheet bending limit
» sheet thickness for stainless steel: factor 0,5
» sheet thickness for aluminum: factor 1,2

Description	E-MTBS 1.350-3,0	E-MTBS 2.050-3,0	E-MTBS 2.550-4,0	E-MTBS 3.050-4,0
sheet thickness (St 37)	max. 3,0 mm	max. 3,0 mm	max. 3,0 mm	max. 4,0 mm
working width	1.350 mm	2.050 mm	2.550 mm	3.050 mm
strokes per minute	35 mm/min	35 mm/min	41 mm/min	41 mm/min
motor power	400 V / 50 Hz / 3 kW	400 V / 50 Hz / 4 kW	400 V / 50 Hz / 7,5 kW	400 V / 50 Hz / 7,5 kW
table depth	390 mm	390 mm	455 mm	455 mm
table height	850 mm	850 mm	850 mm	850 mm
dimensions (L x D x H)	2.150 x 1.930 x 1.310 mm	2.150 x 2.700 x 1.310 mm	3.200 x 2.150 x 1.450 mm	3.700 x 2.150 x 1.450 mm
weight	1.260 kg	1.760 kg	3.510 kg	4.010 kg
	E-MTBS 1.350-3,0	**E-MTBS 2.050-3,0**	**E-MTBS 2.550-4,0**	**E-MTBS 3.050-4,0**
EAN	**4260364294569**	**4260364294583**	**4260364296723**	**4260364296730**
Item No.	**340 7135**	**340 7203**	**340 7254**	**340 7305**

E-HTBS AND E-HSTS MODELS

HYDRAULIC GUILLOTINE SHEARS

PREMIUM-LINE

Hydraulic guillotine shears for cutting material thickness up to 20 mm.

PIC.: E -HSTS 3.060-13

» bending performance data refer to 24 kg/m² sheet bending limit
» sheet thickness for stainless steel: factor 0,5

E-HTBS MODELS

» high-quality, heavy and stable steel welding
» hydraulics and valves from Bosch-Rexroth
» double acting hydraulic cylinders
» motorized backgauge with NC-control ELGO
» light barrier safety system in the rear area
» finger protection in the front
» central cutting gap adjustment
» operation via foot pedal
» emergency stop switch with mobile foot pedal
» sheet metal handles

OPTIONAL EQUIPMENT

» foldable finger guard
» laser cut line display
» sheet metal holder in the back
» support arms with scale

Description	E-HTBS 2.560-6	E-HTBS 3.060-6	E-HTBS 3.060-8	E-HTBS 3.660-6	E-HTBS 4.060-6	E-HTBS 4.060-10
sheet thickness (St 37)	6 mm	6 mm	8 mm	6 mm	6 mm	10 mm
working width	2.560 mm	3.060 mm	3.060 mm	3.660 mm	4.060 mm	4.060 mm
table height	800 mm	800 mm	800 mm	800 mm	900 mm	800 mm
cutting angle	1,6°	1,6°	1,8°	1,2°	1,2°	2°
strokes per minute	15	17	17	20	23	23
motor power	11 kW	11 kW	15 kW	11 kW	11 kW	22 kW
dimensions (L x D x H)	3.190 x 2.940 x 1.570 mm	3.690 x 3.000 x 1.570 mm	3.740 x 3.080 x 1.650 mm	4.400 x 3.080 x 1.650 mm	4.710 x 3.190 x 1.750 mm	4.800 x 3.375 x 1.910 mm
weight	4.670 kg	5.450 kg	6.380 kg	7.300 kg	9.150 kg	13.000 kg
	E-HTBS 2.560-6	**E-HTBS 3.060-6**	**E-HTBS 3.060-8**	**E-HTBS 3.660-6**	**E-HTBS 4.060-6**	**E-HTBS 4.060-10**
EAN	**4260364298079**	**4260364298086**	**4260364298093**	**4260364298109**	**4260364298116**	**4260364298123**
Item No.	**311 1256**	**311 1306**	**311 1308**	**311 1366**	**311 1406**	**311 1410**

Description	E-HSTS 3.060-6	E-HSTS 3.060-10	E-HSTS 3.060-13	E-HSTS 3.060-16	E-HSTS 3.060-20	E-HSTS 4.060-13
sheet thickness (St 37)	6 mm	10 mm	13 mm	16 mm	20 mm	13 mm
working width	3.060 mm	3.060 mm	3.060 mm	3.060 mm	3.060 mm	4.060 mm
table height	800 mm	800 mm	900 mm	900 mm	900 mm	900 mm
cutting angle	1,5°	2°	2,4°	2,7°	3°	2,2°
strokes per minute	17	17	17	17	18	23
motor power	11 kW	22 kW	30 kW	30 kW	37 kW	30 kW
dimensions (L x D x H)	3.770 x 3.100 x 1.825 mm	3.850 x 3.275 x 1.850 mm	3.880 x 3.485 x 2.060 mm	3.840 x 3.550 x 2.230 mm	3.900 x 3.540 x 2.230 mm	4.830 x 3.375 x 2.160 mm
weight	7.000 kg	8.900 kg	11.500 kg	15.500 kg	19.600 kg	16.100 kg
	E-HSTS 3.060-6	**E-HSTS 3.060-10**	**E-HSTS 3.060-13**	**E-HSTS 3.060-16**	**E-HSTS 3.060-20**	**E-HSTS 4.060-13**
EAN	**4260364298130**	**4260364298147**	**4260364298154**	**4260364298161**	**4260364298178**	**4260364298185**
Item No.	**311 2306**	**311 2310**	**311 2313**	**311 2316**	**311 2320**	**311 2413**

E-HTS MODELS

HYDRAULIC GUILLOTINE SHEARS

PREMIUM-LINE

PIC.: E -HTS 6.070-6

Description	E-HTS 3.070-6	E-HTS 3.070-10	E-HTS 3.070-13	E-HTS 4.070-6	E-HTS 4.070-10	E-HTS 4.070-13
sheet thickness (St 37)	6 mm	10 mm	13 mm	6 mm	10 mm	13 mm
working width	3.070mm	3.070 mm	3.070 mm	4.070 mm	4.070 mm	4.070 mm
table height	800 mm	800 mm	800 mm	900 mm	900 mm	900 mm
cutting angle	0,5 - 1,5°	0,5 - 2,0°	0,5 - 2,5°	0,5 - 1,5°	0,5 - 2,0°	0,5 - 2,5°
strokes per minute	20 - 32	20 - 32	20 - 32	20 - 32	20 - 32	20 - 32
motor power	11 kW	11 kW	15 kW	11 kW	11 kW	11 kW
dimensions (L x D x H)	3.930 x 3.450 x 2.040 mm	3.930 x 3.450 x 2.040 mm	3.740 x 3.080 x 1.650 mm	4.890 x 3.295 x 2.170 mm	4.930 x 3.360 x 2.230 mm	4.950 x 3.685 x 2.500 mm
weight	7.800 kg	11.000 kg	6.380 kg	12.000 kg	15.000 kg	18.000 kg
	E-HTS 3.070-6	**E-HTS 3.070-10**	**E-HTS 3.070-13**	**E-HTS 4.070-6**	**E-HTS 4.070-10**	**E-HTS 4.070-13**
EAN	**4260364297959**	**4260364297966**	**4260364297973**	**4260364297980**	**4260364297997**	**4260364298000**
Item No.	**311 3306**	**311 3310**	**311 3313**	**311 3406**	**311 3410**	**311 3413**

Description	E-HTS 4.070-16	E-HTS 4.070-20	E-HTS 6.070-6	E-HTS 6.070-10	E-HTS 6.070-16	E-HTS 6.070-20
sheet thickness (St 37)	16 mm	20 mm	6 mm	10 mm	16 mm	20 mm
working width	4.070 mm	4.070 mm	6.070 mm	6.070 mm	6.070 mm	6.070 mm
table height	900 mm	900 mm	1.000 mm	1.000 mm	1.000 mm	1.000 mm
cutting angle	0,5 - 3,0°	0,5 - 3,0°	0,5 - 1,5°	0,5 - 2,0°	0,5 - 3,0°	0,5 - 3,0°
strokes per minute	20 - 32	20 - 32	20 - 32	20 - 32	20 - 32	20 - 32
motor power	11 kW	11 kW	16,5 kW	16,5 kW	16,5 kW	16,5 kW
dimensions (L x D x H)	4.970 x 3.715 x 2.600 mm	4.9800 x 3.730 x 2.700 mm	6.870 x 3.460 x 2.450 mm	6.950 x 3.550 x 2.800 mm	6.980 x 3.650 x 2.960 mm	7.010 x 3.820 x 3.100 mm
weight	22.000 kg	26.600 kg	36.000 kg	22.000 kg	43.000 kg	46.000 kg
	E-HTS 4.070-16	**E-HTS 4.070-20**	**E-HTS 6.070-6**	**E-HTS 6.070-10**	**E-HTS 6.070-16**	**E-HTS 6.070-20**
EAN	**4260364298017**	**4260364298024**	**4260364298031**	**4260364298048**	**4260364298055**	**4260364298062**
Item No.	**311 3416**	**311 3420**	**311 3606**	**311 3610**	**311 3616**	**311 3620**

E-PPSM-MODELS

PRECISION PLASMA CUTTING MACHINES

PREMIUM-LINE

PIC.: E - PPSM 1503

Description	E-PPSM 1503	E-PPSM 2004	E-PPSM 2006	E-PPSM 2504	E-PPSM 2506
table size	3.200 x 1.700mm	4.800 x 2.200 mm	6.400 x 2.200mm	4.800 x 2.700 mm	6.400 x 2.700 mm
table height	750 mm	750 mm	750 mm	750 mm	750 mm
distance longitudinal axis	3.200 mm	4.200 mm	6.200 mm	4.200 mm	6.200 mm
distance transverse axis	1.700 mm	2.200 mm	2.200 mm	2.700 mm	2.700 mm
dimensions	5.200 x 3.000 x 1.800 mm	6.200 x 3.500 x 1.800 mm	8.200 x 3.500 x 1.800 mm	6.200 x 4.000 x 1.800 mm	8.200 x 4.000 x 1.800 mm
weight (ca.)	3.000 kg	5.000 kg	7.000 kg	6.000 kg	8.000 kg
	E-PPSM 1503	**E-PPSM 2004**	**E-PPSM 2006**	**E-PPSM 2504**	**E-PPSM 2506**
EAN	4260364299601	4260364299618	4260364299625	4260364299632	4260364299649
Item No.	313 5031	313 5042	313 5062	313 5043	313 5063

Description	E-PPSM 3006	E-PPSM 3009	E-PPSM 3012	E-PPSM 3014
table size	6.400 x 3.200 mm	9.600 x 3.200 mm	12.800 x 3.200 mm	14.400 x 3.200 mm
table height	750 mm	750 mm	750 mm	750 mm
distance longitudinal axis	6.200 mm	9.200 mm	12.200 mm	14.200 mm
distance transverse axis	3.200 mm	3.200 mm	3.200 mm	3.200 mm
dimensions	8.200 x 4.500 x 1.800 mm	11.200 x 4.500 x 1.800 mm	14.200 x 4.500 x 1.800 mm	16.000 x 4.500 x 1.800 mm
weight	9.000 kg	11.000 kg	14.000 kg	16.000 kg
	E-PPSM 3006	**E-PPSM 3009**	**E-PPSM 3012**	**E-PPSM 3014**
EAN	4260364299656	4260364299663	4260364299670	4260364299687
Item No.	313 5064	313 5093	313 5123	313 5143

E-IPSM-MODELS

PLASMA CUTTING MACHINES

PREMIUM-LINE

PIC.: E-IPSM 3012 WITH SPECIAL ACCESSORIES
ROUND CUTTING DEVICE

E-IPSM plasma cutting systems are designed for the highest requirements in fine plasma cutting. They are based on the plasma source HYPERTHERM "HPR 130 XD" which enables flame cutting of sheet thicknesses in the range of 0.5 to 38 mm. For unalloyed materials and thicknesses up to 32 mm, laser-like cutting qualities are achieved.
The cutting table is designed for thin and medium sheets - loading capacity up to 1.580 kg/m^2.
The precision of the machine is guaranteed by double linear guides.

Standard Equipment

» plasma source HYPERTHERM „HPR 130-XD“
» automatic gas console
» automatic workpiece alignment by means od laser
» torch height sensor system for the perfect cut
» CNC unit HYPERTHERM „MicroEdge Pro“
» user software: HYPERTHERM „ProNest 2012“ with „TRUE HOLE“ Technology
» position accuracy: +/- 0,2 mm
» linear rail width: 20 mm
» cutting current: 20-130 A
» connected load: 32 kVA

From 8.000 mm travel, the machines have two cutting heads. Thus double the cutting capacity is available.
Simultaneous machining with two cutting heads significantly increases the productivity of the machine.

Overview Technical Data
E-IPSM - Machines

Description	E-IPSM 3006	E-IPSM 3008	E-IPSM 3012	E-IPSM 3014
table size	6.400 x 3.200 mm	8.000 x 3.200 mm	12.800 x 3.200 mm	14.400 x 3.200 mm
table height	750 mm	750 mm	750 mm	750 mm
distance longitudinal axis	6.400 mm	8.000 mm	12.800 mm	14.400 mm
distance transverse axis	3.200 mm	3.200 mm	3.200 mm	3.200 mm
dimensions	8.000 x 5.200 x 1.900 mm	10.000 x 5.200 x 1.900 mm	14.000 x 5.200 x 1.900 mm	16.000 x 5.200 x 1.900 mm
weight	4.100 kg	5.600 kg	7.050 kg	7.800 kg
	E-IPSM 3006	**E-IPSM 3008**	**E-IPSM 3012**	**E-IPSM 3014**
EAN	**4260364298680**	**4260364298703**	**4260364298734**	**4260364298758**
Item No.	**313 4063**	**313 4083**	**313 4123**	**313 4143**

Description	E-IPSM 3016	E-IPSM 4006	E-IPSM 4008	E-IPSM 4010
table size	17.600 x 3.200 mm	6.400 x 4.400 mm	8.000 x 4.400 mm	11.200 x 4.400 mm
table height	750 mm	750 mm	750 mm	750 mm
distance longitudinal axis	17.600 mm	6.400 mm	8.000 mm	11.200 mm
distance transverse axis	3.200 mm	4.400 mm	4.400 mm	4.400 mm
dimensions	18.000 x 5.200 x 1.900 mm	8.000 x 6.200 x 1.900 mm	10.000 x 6.200 x 1.900 mm	12.000 x 6.200 x 1.900 mm
weight	9.100 kg	5.900 kg	8.200 kg	9.300 kg
	E-IPSM 3016	**E-IPSM 4006**	**E-IPSM 4008**	**E-IPSM 4010**
EAN	**4260364298772**	**4260364298697**	**4260364298710**	**4260364298727**
Item No.	**313 4163**	**313 4064**	**313 4084**	**313 4104**

Description	E-IPSM 4012	E-IPSM 4014	E-IPSM 4016	E-IPSM 4018
table size	12.800 x 4.400 mm	14.400 x 4.400 mm	17.600 x 4.400 mm	19.200 x 4.400 mm
table height	750 mm	750 mm	750 mm	750 mm
distance longitudinal axis	12.800 mm	14.400 mm	17.600 mm	19.200 mm
	4.400 mm	4.400 mm	4.400 mm	4.400 mm
distance transverse axis	14.000 x 6.200 x 1.900 mm	16.000 x 6.200 x 1.900 mm	18.000 x 6.200 x 1.900 mm	20.000 x 6.200 x 1.900 mm
dimensions	10.450 kg	11.600 kg	13.700 kg	14.850 kg
	E-IPSM 4012	**E-IPSM 4014**	**E-IPSM 4016**	**E-IPSM 4018**
EAN	**4260364298741**	**4260364298765**	**4260364298789**	**4260364298796**
Item No.	**313 4124**	**313 4144**	**313 4164**	**313 4184**

SMALLER MACHINES FROM 2.200 X 1.600 MM ON REQUEST.

E-LSA-MODELS

LASER CUTTING MACHINES

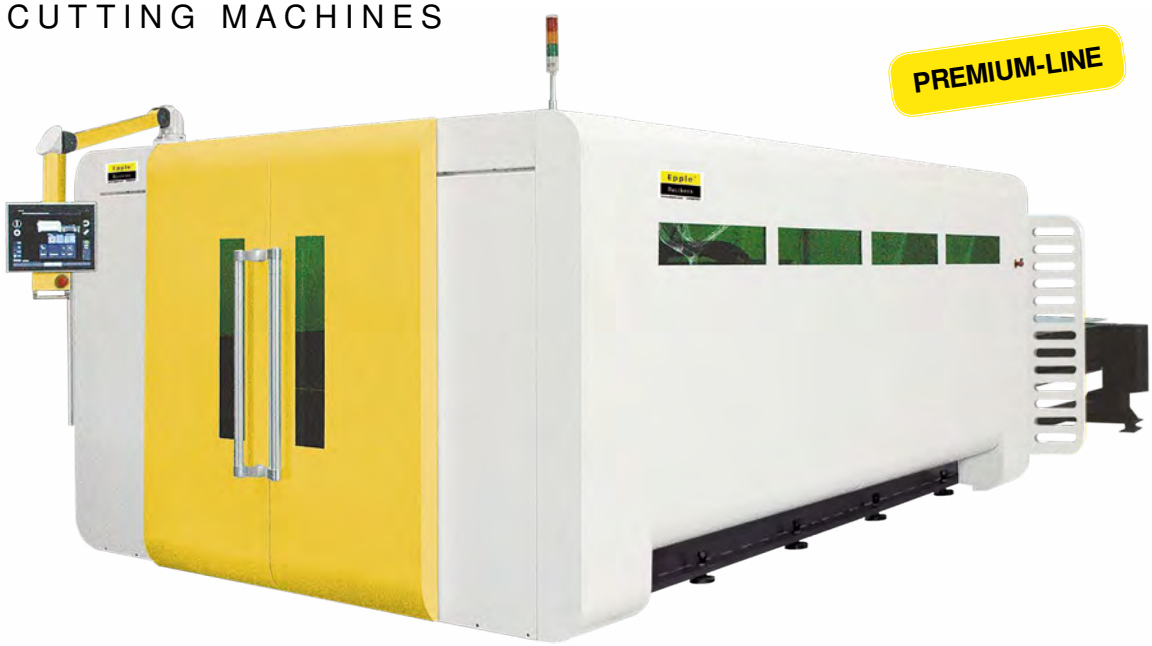

E-LSA - laser cutting systems offer high engineering level, precision, high cutting speed and low costs when cutting thin workpieces up to 25 mm.

Precise and simple processing of large and small plate formats up to 8 mm in cold rolled steel, up to 5 mm in stainless steel (at laser
power 2 kW).

» high-speed and high-precision servo motion system.
» no repositioning of the plate ensures optimum accuracy
» fiber optic laser delivery system
» simple user interface and cutting database
» CNC-controlled hydraulic lifting double shuttle table^1
» easily accessable remote diagnostic functions
» long service life of the lens due to lens protection

Up to sheet thickness of 5 mm, a fiber laser offers advantages over CO_2 lasers. It is around 30% more economical in consumption, requires almost no maintenance, and takes up less space.
Copper, bronze, titanium and brass can also be cut.

Operating costs are lower for CO_2-lasers with sheet thicknesses over 8 mm and higher cutting speeds are possible for sheet thicknesses over 5 mm. CO_2-lasers can also be used to cut wood, plastic, glass and coated sheet metal, as well as stainless steel and aluminum over 15 mm thickness.

Description	E-LSA 4020-2 FI	E-LSA 4020-3 FI	E-LSA 4020-4 FI	E-LSA 4020-4 CO
cutting thickness - rolled steel	15 mm	18 mm	20 mm	20 mm
cutting range	4.000 x 2.000 mm	4.000 x 2.000 mm	4.000 x 2.000 mm	4.000 x 2.000 mm
table load	525 kg/m^2	525 kg/m^2	525 kg/m^2	525 kg/m^2
feed	210 m/min	210 m/min	210 m/min	210 m/min
rapid traverse x/y	310 m/min	310 m/min	310 m/min	310 m/min
laser power	2 kW	3 kW	4 kW	4 kW
dimensions (L x D x H)	12.500 x 7.050 x 2.250 mm	12.500 x 7.050 x 2.250 mm	12.500 x 7.050 x 2.250 mm	12.500 x 7.050 x 2.250 mm

	E-LSA 4020-2 FI	E-LSA 4020-3 FI	E-LSA 4020-4 FI	E-LSA 4020-4 CO
EAN	**4260364299229**	**4260364299236**	**4260364299243**	**4260364299250**
Item No.	**313 1422**	**313 1423**	**313 1424**	**313 0424**

Overview Technical Data
E-LSA - Machines

Description	E-LSA 4030-4 FI	E-LSA 4030-4 CO	E-LSA 6020-3 FI	E-LSA 6020-4 FI	E-LSA 6020-4 CO	E-LSA 6020-5 CO
cutting thickness - rolled steel	20 mm	20 mm	18 mm	20 mm	20 mm	22 mm
cutting range	4.000 x 3.000 mm	4.000 x 3.000 mm	6.000 x 2.000 mm	6.000 x 2.000 mm	6.000 x 2.000 mm	6.000 x 2.000 mm
table load	525 kg/m^2	525 kg/m^2	525 kg/m^2	525 kg/m^2	525 kg/m^2	525 kg/m^2
feed	210 m/min	210 m/min	210 m/min	210 m/min	210 m/min	210 m/min
rapid traverse x/y	310 m/min	310 m/min	310 m/min	310 m/min	310 m/min	310 m/min
laser power	4 kW	4 kW	3 kW	4 kW	4 kW	5 kW
dimensions (L x D x H)	12.500 x 8.050 x 2.250 mm	12.500 x 8.050 x 2.250 mm	16.500 x 7.050 x 2.250 mm	16.500 x 7.050 x 2.250 mm	16.500 x 7.050 x 2.250 mm	16.500 x 7.050 x 2.250 mm
	E-LSA 4030-4 FI	**E-LSA 4030-4 CO**	**E-LSA 6020-3 FI**	**E-LSA 6020-4 FI**	**E-LSA 6020-4 CO**	**E-LSA 6020-5 CO**
EAN	**4260364299267**	**4260364299274**	**4260364299281**	**4260364299298**	**4260364299304**	**4260364299311**
Item No.	**313 1434**	**313 0434**	**313 1623**	**313 1624**	**313 0624**	**313 0625**

Description	E-LSA 6030-3 FI	E-LSA 6030-4 FI	E-LSA 6030-4 CO	E-LSA 6030-5 CO	E-LSA 8020-4 FI	E-LSA 8020-4 CO
cutting thickness - rolled steel	18 mm	20 mm	20 mm	22 mm	20 mm	20 mm
cutting range	6.000 x 3.000 mm	6.000 x 3.000 mm	6.000 x 3.000 mm	6.000 x 3.000 mm	8.000 x 2.000 mm	8.000 x 2.000 mm
table load	525 kg/m^2	525 kg/m^2	525 kg/m^2	525 kg/m^2	525 kg/m^2	525 kg/m^2
feed	210 m/min	210 m/min	210 m/min	210 m/min	210 m/min	210 m/min
rapid traverse x/y	310 m/min	310 m/min	310 m/min	310 m/min	310 m/min	310 m/min
laser power	3 kW	4 kW	4 kW	5 kW	4 kW	4 kW
dimensions (L x D x H)	16.500 x 8.050 x 2.250 mm	16.500 x 8.050 x 2.250 mm	16.500 x 8.050 x 2.250 mm	16.500 x 8.050 x 2.250 mm	20.500 x 7.050 x 2.250 mm	20.500 x 7.050 x 2.250 mm
	E-LSA 6030-3 FI	**E-LSA 6030-4 FI**	**E-LSA 6030-4 CO**	**E-LSA 6030-5 CO**	**E-LSA 8020-4 FI**	**E-LSA 8020-4 CO**
EAN	**4260364299328**	**4260364299335**	**4260364299342**	**4260364299359**	**4260364299366**	**4260364299373**
Item No.	**313 1633**	**313 1634**	**313 0634**	**313 0635**	**313 1824**	**313 0824**

Description	E-LSA 8030-4 FI	E-LSA 8030-4 CO	E-LSA 8030-5 CO	E-LSA 10020-5 CO	E-LSA 10020-6 CO	E-LSA 10030-6 CO
cutting thickness - rolled steel	20 mm	20 mm	22 mm	22 mm	25 mm	25 mm
cutting range	8.000 x 3.000 mm	8.000 x 3.000 mm	8.000 x 3.000 mm	10.000 x 2.000 mm	10.000 x 2.000 mm	10.000 x 3.000 mm
table load	525 kg/m^2	525 kg/m^2	525 kg/m^2	525 kg/m^2	525 kg/m^2	525 kg/m^2
feed	210 m/min	210 m/min	210 m/min	210 m/min	210 m/min	210 m/min
rapid traverse x/y	310 m/min	310 m/min	310 m/min	310 m/min	310 m/min	310 m/min
laser power	4 kW	4 kW	5 kW	5 kW	6 kW	6 kW
dimensions (L x D x H)	20.500 x 8.050 x 2.250 mm	20.500 x 8.050 x 2.250 mm	20.500 x 8.050 x 2.250 mm	24.500 x 7.050 x 2.250 mm	24.500 x 7.050 x 2.250 mm	24.500 x 8.050 x 2.250 mm
	E-LSA 8030-4 FI	**E-LSA 8030-4 CO**	**E-LSA 8030-5 CO**	**E-LSA 10020-5 CO**	**E-LSA 10020-6 CO**	**E-LSA 10030-6 CO**
EAN	**4260364299380**	**4260364299397**	**4260364299403**	**4260364299410**	**4260364299427**	**4260364299434**
Item No.	**313 1834**	**313 0834**	**313 0835**	**313 0125**	**313 0126**	**313 0136**

E-HPS 40

HYDRAULIC STEELWORKER

NEW

PREMIUM-LINE

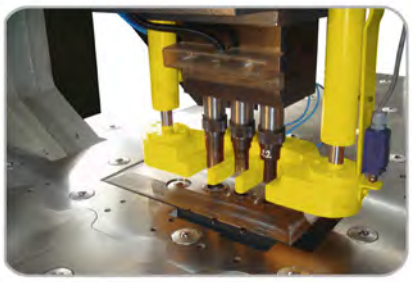

» cutting performance data refer to 24 kg/m² sheet bending limit
» sheet thickness for stainless steel: factor 0,5
» sheet thickness for aluminum: factor 1,2

E-HPS 40

» 4 processing stations with foot control
» cutting, notching, notching and punching of angle iron, flat iron and bar material
» central lubrication
» high-quality, heavy and sturdy steel welded construction

Description	E-HPS 40
punching force	40 t
working range	175 mm
working stroke	50 mm
working height (hole punch)	970 mm
motor power	400 V / 50 Hz / 3 kW
dimensions (L x D x H)	1.100 x 800 x 1.520 mm
weight	580 kg
	E-HPS 40
EAN	**4260364296747**
Item No.	**353 0040**

Description	E-HPS 40
max. thickness diameter	20 x 15 mm
thickness diameter	30 x 10 mm
working stroke	50 mm
working height	970 mm
sheet shears	-
sheets	200 x 13 mm
sheets	300 x 6 mm
blade length	356 mm
shearing with angle	80 x 10 mm
working height	970 mm
angle steel at 90°	-
angle steel at 45°	80 x 80 x 8 mm
working height	50 x 6 mm
steel sheers	1.110 mm
circular	-
square	ø 30 mm
rectangular	25 mm

For a complete overview of E-HPS machines check page 233.

E-HPS 45 / E-HPS 60

HYDRAULIC STEELWORKERS

PREMIUM-LINE

PIC.: E-HPS 60

notching station
Table with arrester and scales

flat steel station
Table with angle arresters and adjustable blank holders

Produktvideo-QR oder
www.epple.com

rod steel station
With blank holder

angle iron station
45/ 90° angle

punch station
Max. capacity 28 x 15 mm
and 38 x 11mm

Specify tool brand with your order:

- **Mubea**
- **Kingsland**
- **Peddinghaus**

- **cutting performance data refer to 24 kg/m² sheet bending limit**
- **sheet thickness for stainless steel: factor 0,5**
- **sheet thickness for aluminum: factor 1,2**

E-HPS 45 / E-HPS 60
WITH 5 WORKSTATIONS

- 5 processing stations with foot controller
- punching, steel bar shearing, angle iron cropping, sheet metal shearing, notching
- for fast working with short cycle times
- heavy welded steel construction
- motor 400 V / 4 kW

Description	E-HPS 45	E-HPS 60
punching force	45 t	60 t
working range	175 mm	220 mm
working stroke	50 mm	55 mm
working height (hole punch)	935 mm	955 mm
motor power	400 V / 50 Hz / 4 kW	400 V / 50 Hz / 4 kW
dimensions (L x D x H)	1.430 x 950 x 1.680 mm	1.520 x 950 x 1.780 mm
weight	1.180 kg	1.440 kg
	E-HPS 45	**E-HPS 60**
EAN	**4260364292503**	**4260364292510**
Item No.	**353 0045**	**353 0060**

For a complete overview of E-HPS machines check page 233.

E-HPS 55 / E-HPS 65

HYDRAULIC STEELWORKER

PREMIUM-LINE

Produktvideo-QR oder
www.epple.com

PIC.: E-HPS 65

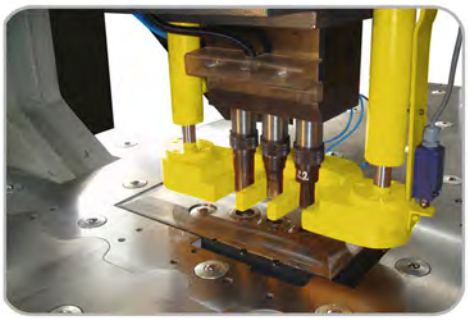

E-HPS 55 / E-HPS 65

» 5 processing stations with foot controller
» punching, steel bar shearing, angle iron cropping, sheet metal shearing, notching
» double cylinder
» for fast working with short cycle times
» heavy welded steel construction
» motor 400 V / 5,5 kW

Specify tool brand with your order:

» **Mubea**
» **Kingsland**
» **Peddinghaus**

» cutting performance data refer to 24 kg/m² sheet bending limit
» sheet thickness for stainless steel: factor 0,5
» sheet thickness for aluminum: factor 1,2

Description	E-HPS 55	E-HPS 65
punching force	55 t	65 t
working range	255 mm	305 mm
working stroke	60 mm	55 mm
working height (hole punch)	1.030 mm	1.030 mm
motor power	400 V / 50 Hz / 5,5 kW	400 V / 50 Hz / 5,5 kW
dimensions (L x D x H)	1.500 x 950 x 1.880 mm	1.700 x 950 x 1.880 mm
weight	1.520 kg	1.600 kg
	E-HPS 55	**E-HPS 65**
EAN	**4260364292527**	**4260364292534**
Item No.	**353 0055**	**353 0065**

For a complete overview of E-HPS machines check page 233.

E-HPS 65 V

HYDRAULIC STEELWORKERS

NEW

PREMIUM-LINE

PIC.: E-HPS 65 V

E-HPS 65 V
WITH 5 WORK STATIONS

» 5 processing stations with foot controller
» punching, steel bar shearing, angle iron cropping, sheet metal shearing, notching
» double cylinder
» for fast working with short cycle times
» heavy welded steel construction
» electric motor 400 V / 5,5 kW / 7,5 kW

» cutting performance data refer to 24 kg/m² sheet bending limit
» sheet thickness for stainless steel: factor 0,5
» sheet thickness for aluminum: factor 1,2

Specify tool brand with your order:

» Mubea
» Kingsland
» Peddinghaus

Description	E-HPS 65 V
punching force	65 t
working range	240 mm
working stroke	40 mm
working height	1.050 / 1.070 / 810 mm
motor power	400 V / 50 Hz / 5,5 kW
dimensions (L x D x H)	1.180 x 900 x 1.720 mm
weight	1.215 kg

	E-HPS 65 V
EAN	**4260364296754**
Item No.	**353 0066**

For a complete overview of E-HPS machines check page 233.

E-HPS 85 / E-HPS 115 / E-HPS 175

HYDRAULIC STEELWORKERS

PREMIUM-LINE

PIC.: E-HPS 175

E-HPS 85 / E-HPS 115 / E-HPS 175
WITH 5 WORK STATIONS

- 5 processing stations with foot controller
- punching, steel bar shearing, angle iron cropping, sheet metal shearing, notching
- with double cylinder
- for fast working with short cycle times
- heavy welded steel construction
- electric motor 400 V / 7,5 - 11 kW

Specify tool brand with your order:

- **Mubea**
- **Kingsland**
- **Peddinghaus**

- **cutting performance data refer to 24 kg/m² sheet bending limit**
- **sheet thickness for stainless steel: factor 0,5**
- **sheet thickness for aluminum: factor 1,2**

Description	E-HPS 85	E-HPS 115	E-HPS 175
punching force	85 t	115 t	175 t
working range	355 mm	355 mm	625 mm
working stroke	80 mm	80 mm	80 mm
working height (hole punch)	1.080 mm	1.110 mm	1.130 mm
motor power	400 V / 50 Hz / 7,5 kW	400 V / 50 Hz / 11 kW	400 V / 50 Hz / 11 kW
dimensions (L x D x H)	1.920 x 950 x 2.040 mm	2.040 x 950 x 2.180 mm	2.730 x 1.150 x 2.280 mm
weight	2.315 kg	2.920 kg	6.000 kg

	E-HPS 85	E-HPS 115	E-HPS 175
EAN	**4260364292541**	**4260364292558**	**4260364292565**
Item No.	**353 0085**	**353 0115**	**353 0175**

For a complete overview of E-HPS machines check page 233.

Overview Technical Data

E-HPS - Machines

Description	E-HPS 40	E-HPS 45	E-HPS 60	E-HPS 55	E-HPS 65
hole punch	-	-	-	-	-
max. thickness diameter	20 x 15 mm	22 x 15 mm	28 x 15 mm	20 x 20 mm	26 x 20 mm
thickness diameter	30 x 10 mm	38 x 8 mm	38 x 11 mm	40 x 10 mm	57 x 10 mm
working stroke	50 mm	50 mm	55 mm	60 mm	55 mm
working height	970 mm	935 mm	955 mm	1.030 mm	1.030 mm
sheet shear	-	-	-	-	-
sheet	200 x 13 mm	200 x 15 mm	200 x 20 mm	200 x 20 mm	300 x 20 mm
sheet	300 x 6 mm	300 x 12 mm	300 x 15 mm	300 x 15 mm	375 x 15 mm
blade length	356 mm	316 mm	317 mm	317 mm	380 mm
angle shear	80 x 10 mm	80 x 10 mm	80 x 10 mm	80 x 15 mm	100 x 15 mm
working height	980 mm	935 mm	955 mm	900 mm	900 mm
steel profile shear	-	-	-	-	-
angle iron at 90°	80 x 80 x 8 mm	100 x 100 x 10 mm	120 x 120 x 12 mm	120 x 120 x 12 mm	120 x 120 x 12 mm
angle iron at 45°	50 x 6 mm	70 x 6 mm	80 x 8 mm	70 x 10 mm	70 x 10 mm
working height	1.110 mm	1.140 mm	1.155 mm	1.130 mm	1.130 mm
steel bar shear	-	-	-	-	-
circular	ø 30 mm	ø 30 mm	ø 40 mm	ø 40 mm	ø 45 mm
square	25 mm	25 mm	35 mm	40 mm	45 mm
notching	-	-	-	-	-
material thickness	-	8 mm	10 mm	10 mm	10 mm
length	1.100 mm	1.430 mm	1.520 mm	1.500 mm	1.700 mm
depth	800 mm	950 mm	950 mm	950 mm	950 mm
working height	1.520 mm	1.680 mm	1.780 mm	1.880 mm	1.880 mm

Description	E-HPS 65 V	E-HPS 85	E-HPS 85 V	E-HPS 115	E-HPS 175
hole punch	-	-	-	-	-
max. thickness diameter	26 x 20 mm	33 x 20 mm	33 x 20 mm	34 x 26 mm	40 x 32 mm
thickness diameter	57 x 10 mm	57 x 12 mm	57 x 12 mm	55 x 16 mm	57 x 22 mm
working stroke	55 mm	80 mm	80 mm	80 mm	80 mm
working height	1.030 mm	1.080 mm	1.080 mm	1.110 mm	1.130 mm
sheet shear	-	-	-	-	-
sheet	300 x 20 mm	380 x 20 mm	380 x 20 mm	380 x 25 mm	380 x 30 mm
sheet	375 x 15 mm	480 x 15 mm	480 x 15 mm	600 x 15 mm	600 x 20 mm
blade length	380 mm	482 mm	482 mm	610 mm	610 mm
angle shear	100 x 15 mm	120 x 15 mm	120 x 15 mm	120 x 15 mm	120 x 15 mm
working height	900 mm	940 mm	940 mm	935 mm	810 mm
steel profile shear	-	-	-	-	-
angle iron at 90°	120 x 120 x 12 mm	150 x 150 x 15 mm	150 x 150 x 15 mm	150 x 150 x 16 mm	200 x 200 x 20 mm
angle iron at 45°	70 x 10 mm	80 x 8 mm	80 x 8 mm	80 x 10 mm	80 x 10 mm
working height	1.130 mm	1.200 mm	1.200 mm	1.215 mm	1.130 mm
steel bar shear	-	-	-	-	-
circular	ø 45 mm	ø 50 mm	ø 50 mm	ø 55 mm	ø 65 mm
square	45 mm	50 mm	50 mm	50 mm	55 mm
notching	-	-	-	-	-
material thickness	10 mm	13 mm	13 mm	13 mm	16 mm
length	1.800 mm	1.920 mm	1.800 mm	2.040 mm	2.730 mm
depth	900 mm	950 mm	1.050 mm	950 mm	1.150 mm
working height	1.880 mm	2.040 mm	1.880 mm	2.180 mm	2.280 mm

E-HLS 30 / E-HLS 65 / E-HLS 85
E-HLS 115 / E-HLS 175

HYDRAULIC HOLE PUNCHING MACHINES

PREMIUM-LINE

PIC.: E-HLS 85

E-HLS 30 / E-HLS 65 / E-HLS 85 / E-HLS 115 / E-HLS 175

» for punching sheets, flat and U-steel
» heavy and stable welded construction
» time-saving, stepless stroke adjustment
» stamp holder
» LED working light
» C-clamps

» cutting performance data refer to 24 kg/m² sheet bending limit
» sheet thickness for stainless steel: factor 0,5
» sheet thickness for aluminum: factor 1,2

TECHNICAL DATA

Description	E-HLS 30	E-HLS 65	E-HLS 85	E-HLS 115	E-HLS 175
punching force	30 t	65 t	85 t	115 t	175 t
working range	625 mm	625 mm	625 mm	625 mm	625 mm
punching diameter max. thickness diameter	18 x 12 mm	26 x 20 mm	33 x 20 mm	34 x 26 mm	40 x 32 mm
punching machine thickness diameter	22 x 10 mm	57 x 10 mm	57 x 12 mm	55 x 16 mm	57 x 22 mm
working stroke	55 mm	55 mm	80 mm	80 mm	80 mm
no. of strokes at 20 mm	x 20	x 22	x 21	x 21	x 21
working height (hole punch)	1.030 mm	950 mm	950 mm	950 mm	950 mm
motor power	400 V / 50 Hz / 3 kW	400 V / 50 Hz / 5,5 kW	400 V / 50 Hz / 7,5 kW	400 V / 50 Hz / 11 kW	400 V / 50 Hz / 11 kW
dimensions (L x D x H)	1.160 x 900 x 1.560 mm	1.600 x 900 x 1.800 mm	1.850 x 950 x 1.920 mm	2.000 x 950 x 1.970 mm	2.700 x 1.120 x 2.160 mm
weight	1.200 kg	2.440 kg	3.270 kg	3.760 kg	5.270 kg

	E-HLS 30	E-HLS 65	E-HLS 85	E-HLS 115	E-HLS 175
EAN	**4260364298826**	**4260364292596**	**4260364292602**	**4260364292619**	**4260364292626**
Item No.	**353 2030**	**353 2065**	**353 2085**	**353 2115**	**353 2175**

E-HLS DP - MODELS

HYDRAULIC HOLE PUNCHING MACHINES

PREMIUM-LINE

ABB.: E-HLS 115 DP

Description	E-HLS 65 DP	E-HLS 85 DP	E-HLS 115 DP	E-HLS 175 DP
punching force	2 x 65 t	2 x 85 t	2 x 115 t	2 x 175 t
dimensions (L x D x H)	1.900 x 950 x 1.800 mm	2.250 x 950 x 1.920 mm	2.350 x 950 x 1.970 mm	2.800 x 1.100 x 2.160 mm
weight	2.900 kg	3.700 kg	4.600 kg	6.750 kg

	E-HLS 65 DP	E-HLS 85 DP	E-HLS 115 DP	E-HLS 175 DP
EAN	**4260364299762**	**4260364299779**	**4260364299786**	**4260364299793**
Item No.	**353 3065**	**353 3085**	**353 3115**	**353 3175**

E-HLS DP - MODELS

On machines with two workstations (E-HLS DP) it is possible to work highly productively, either by two persons at the same time or by preparing different punching tools.

Model E-HLS 30 only for single operation, all other models also with double station.

DDP 2 / DDP 3 / DDP 5

ARBOR PRESSES

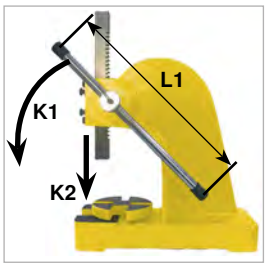

PIC.: DDP 2

PIC.: DDP 3

PIC.: DDP 5

DDP 2 / DDP 3 / DDP 5
HEAVY CASTING PRECISE

» ideal for work- and repair shops
» stable construction
» body made of high-grade grey cast iron
» suitable for molding in and crushing bearing, arbors, bushings, spindles and pins
» for bending, flattening and broaching operations
» turntable adjustable in four positions
» variable adjustable lever rod
» fixed on a working table

Description	DDP 2	DDP 3	DDP 5
max. height press	195 mm	305 mm	455 mm
working range	136 mm	159 mm	210 mm
pusher size (W x D x H)	33 x 33 x 350 mm	38 x 38 x 460 mm	50 x 50 x 640 mm
table size	160 mm	185 mm	255 mm
dimensions (W x D x H)	200 x 425 x 565 mm	275 x 460 x 845 mm	340 x 640 x 1.185 mm
weight	33 kg	48 kg	150 kg
K1	at 60 kg	at 60 kg	at 60 kg
K2	1.290 kg	1.186 kg	1.976 kg
L1	40,5 cm	54 cm	80 cm

	DDP 2	DDP 3	DDP 5
EAN	**4260364292336**	**4260364292343**	**4260364292350**
Item No.	**225 8002**	**225 8003**	**225 8005**

horizontal and vertical Press Brakes

E-HBP 10

MOBILE HYDRAULIC PRESS

NEW

PREMIUM-LINE

PIC.: E-HBP 10

PIC.: E-HBP 10 WITH OPTIONAL STAND

E-HBP 10

» horizontal press for mobile use for bending various profiles
» ideal for service vehicles
» punch and die are hardened
» simple stroke adjustment

OPTIONAL EQUIPMENT

» Substructure for stationary use

Description	E-HBP 10
pressure	10 t
max. pressure	120 bar
min. distance compression die	110 mm
max. distance compression die	310 mm
height of pressure stamps	100 mm
motor power	230 V / 50 Hz / 1,5 kW
dimensions (L x D x H)	1200 x 250 x 400 mm
weight	80 kg
	E-HBP 10
EAN	**4260364299748**
Item No.	**353 0010**

E-HBP 22 / E-HBP 40

HORIZONTAL HYDRAULIC BENDING PRESSES

PREMIUM-LINE

PIC.: E-HBP 22

PIC.: E-HBP 40

E-HBP 22 / E-HBP 40
WITH UP TO 40 TONS BENDING PRESSURE

» easy adjustable stroke length on the front side
» massive and stable working table made of ground steel
» hydraulic movable slide made of forged steel, tempered, ground and protected by dust scraper
» machine operating by foot pedal or two-hand control
» conic quick-change tool holder bolts made of hardened steel

Examples of use

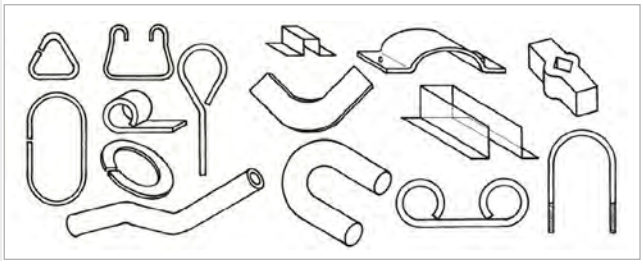

HBP 40

OPTIONAL EQUIPMENT

» alternatively also available with 7 stations pipe bending tools and NC control

Description	E-HBP 22	E-HBP 40
bending pressure	22 t	40 t
table size	625 x 1.100 mm	620 x 1.050 mm
stroke length	200 mm	250 mm
bending capacity flat steel	120 x 15 mm	160 x 20 mm
bending- / release speed	1.750 mm/min 2.000 mm/min	1.750 mm/min 2.000 mm/min
bolt height	120 mm	160 mm
bolt diameter	55 mm / 55 mm	55 mm / 63 mm
motor power	400 V / 50 Hz / 2,2 kW	400 V / 50 Hz / 4 kW
dimensions (L x D x H)	630 x 1.100 x 925 mm	700 x 1.150 x 950 mm
weight	635 kg	920 kg
	E-HBP 22	**E-HBP 40**
EAN	**4260364292572**	**4260364292589**
Item No.	**353 1022**	**353 1040**

E-HBP 80

HYDRAULIC HORIZONTAL PRESS

NEW

PREMIUM-LINE

PIC.: E-HBP 80

E-HBP 80
HYDRAULIC HORIZONTAL PRESS WITH UP TO 80 TONS BENDING PRESSURE

» pressure carriage made of forged steel hardened, with dust wiper
» easily adjustable stroke from the front
» slide stroke adjustment via hydraulic valves with handwheels
» stroke adjustment also possible under working pressure
» hardened tool holder pins made of alloy steel
» operation via foot pedal or two-hand control possible

OPTIONAL EQUIPMENT

» special tools for bending tubes and flat steels in special bends or angle radii.
» NC-control

Descrption	E-HBP 80
table size	520 x 620 mm
table height	950 mm
bolt height	280 mm
pressure	80 t
max. pressure	300 bar
Lifting speed under pressure	470 mm/min
infeed / retraction speed	2250-2500 mm/min
motor power	7,5 kW
dimensions (B x D x H)	1200 x 750 x 1430 mm
weight	1600 kg
	E-HBP 80
EAN	**4260364299755**
Item No.	**353 2080**

HAKP 24 / HAKP 48

HYDRAULIC BENDING PRESS

NEW

PIC.: HAKP 24

PIC.: HAKP 48

HAKP 24 / HAKP 48

» universal robust folding machine
» ideal for repair purposes
» samples and / or small quantities
» with manual back gauge 105-550 mm

The lower tool has different prisms for flexible use.
Both machines can be used stationary and mobile.

Description	HAKP 24	HAKP 48
pressure	15 t	30 t
max. sheet thickness	4 mm	4 mm
max. bending width	600 mm	1.200 mm
stroke	150 mm	150 mm
motor power	1,5 kW	3 kW
dimensions (L x D x H)	1.200 x 555090 x 1.250 mm	1.450 x 660 x 1.450 mm
weight	350 kg	620 kg

	HAKP 24	HAKP 48
EAN	**4260364297645**	**4260364297652**
Item No.	**227 1024**	**227 1048**

HWP 30 T / HWP E 30 T

UNIVERSAL HYDAULIC PRESSES

PIC.: HWP 30 T

PIC.: HWP E 30 T

HWP 30 T / HWP E 30 T

» for all reparation and maintenance work,
adjusting of axes, bearings, arbors, pressing
of bearings, bolts and bushings, press and squeeze work
» stable welding construction
» robust frame with boring for the adjustment of the press table
» exceedingly precise hydraulic made in Europe
» pressure build-up through actuating the pump lever manually
» with fixed chromed cylinder pistons
» press pressure readable via manometer
» with speeded up flow and automatic return of the piston

Description	HWP 30 T
cutting pressure	30 t
max. pressure	7,5 t
working stroke	200 mm
working range	500 mm
table size	300 x 200 mm
dimensions (L x D x H)	770 x 610 x 1.670 mm
weight	320 kg
	HWP 30 T
EAN	**4260364294675**
Item No.	**225 9031**

Description	HWP E 30 T
cutting pressure	30 t
max. pressure	7,5 t
working stroke	200 mm
working range	500 mm
table size	400 x 300 mm
motor power	400 V / 50 Hz / 3,0 kW
dimensions (L x D x H)	950 x 400 x 1.400 mm
weight	420 kg
	HWP E 30 T
EAN	**4260364294682**
Item No.	**225 9030**

E-HWP 500-10 / E-HWP 500-20
E-HWP 600-30

UNIVERSAL HYDRAULIC PRESSES

PREMIUM-LINE

PIC.: E-HWP 500-10

PIC.: E-HWP 600-30

E-HWP - MODELS

For all repair and assembly work, straightening of axes, girders, shafts, pressing and unloading of bearings, bolts and bushes, crimping and crushing, stress tests and welding tests.

» stable welded construction
» robust frame with perforation for adjustment of the press table

Description	E-HWP 500-10	E-HWP 500-20	E-HWP 600-30
cutting pressure	10 t	20 t	30 t
max. pressure	244 bar	244 bar	244 bar
working stroke	180 mm	170 mm	180 mm
cylinder dimensions	80 mm	85 mm	90 mm
working width (B)	600 mm	500 mm	600 mm
working depth (C)	285 mm	120 mm	120 mm
dimensions (L x D x H)	705 x 500 x 920 mm	850 x 750 x 1.600 mm	1.000 x 650 x 1.870 mm
weight	125 kg	200 kg	200 kg
	E-HWP 500-10	**E-HWP 500-20**	**E-HWP 600-30**
EAN	**4260364296778**	**4260364296785**	**4260364296792**
Item No.	**360 4601**	**360 4602**	**360 4603**

DIMENSIONS OF THE FOLLOWING WORKSHOP PRESSES

E-WP - MODELS

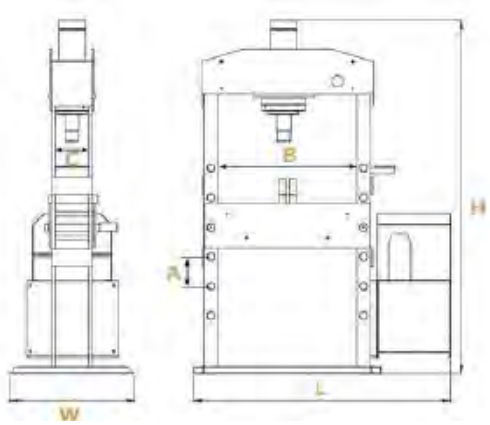

Description	E-WP 775-30	E-WP 1.040-60	E-WP 1.040-80	E-WP 1.070-100
A - hole distance	165 mm	165 mm	165 mm	190 mm
B - working surface	775 mm	1.040 mm	1.040 mm	1.070 mm
C - depth	190 mm	260 mm	260 mm	250 mm
L - length	1.500 mm	1.745 mm	1.810 mm	2.110 mm
W - depth	700 mm	700 mm	750 mm	1.000 mm
H - height	2.015 mm	2.100 mm	2.100 mm	2.290 mm

Description	E-WP 1.070-150	E-WP 1.570-100	E-WP 1.570-150	E-WP 1.570-200
A - hole distance	190 mm	190 mm	190 mm	250 mm
B - working surface	1.070 mm	1.570 mm	1.070 mm	1.570 mm
C - depth	290 mm	250 mm	290 mm	440 mm
L - length	2.110 mm	2.630 mm	2.630 mm	2.250 mm
W - depth	1.000 mm	1.000 mm	1.000 mm	1.165 mm
H - height	2.340 mm	2.290 mm	2.340 mm	2.860 mm

E-WPK - MODELS

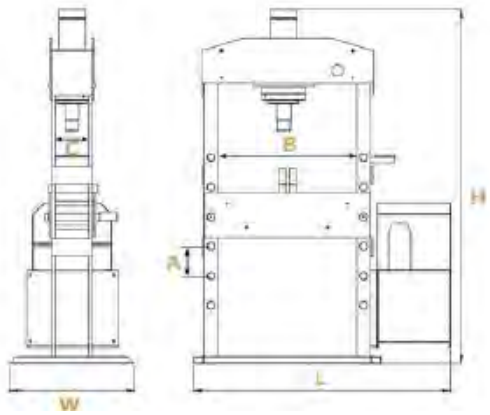

Description	E-WPK 1.040-80	E-WPK 1.070-100	E-WPK 1.070-150	E-WPK 1.570-150
A - hole distance	165 mm	190 mm	190 mm	190 mm
B - working surface	1.040 mm	1.070 mm	1.070 mm	1.570 mm
C - depth	260 mm	315 mm	360 mm	360 mm
L - length	1.810 mm	2.110 mm	2.110 mm	2.630 mm
W - depth	750 mm	1.000 mm	1.000 mm	1.000 mm
H - height	2.100 mm	2.430 mm	2.480 mm	2.480 mm

E-WPR - MODELS

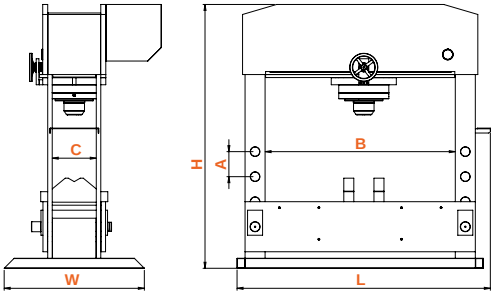

Description	E-WPR 1.570-100	E-WPK 1.570-150	E-WPK 1.900-200
A - hole distance	190 mm	190 mm	250 mm
B - working surface	1.570 mm	1.570 mm	1.900 mm
C - depth	315 mm	360 mm	440 mm
L - length	2.630 mm	2.630 mm	2.570 mm
W - depth	1.000 mm	1.000 mm	1.665 mm
H - height	2.625 mm	2.625 mm	2.860 mm

DIMENSIONS OF THE FOLLOWING WORKSHOP PRESSES

E-UWP - MODELS

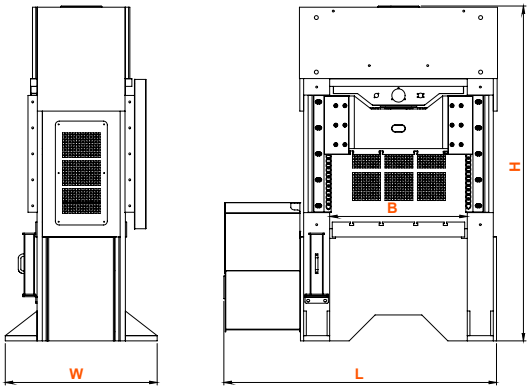

Description	E-UWP 1.020-100	E-UWP 1.020-150	E-UWP 1.520-100	E-UWP 1.520-150
A - hole distance	190 mm	190 mm	190 mm	190 mm
B - working surface	1.020 mm	1.020 mm	1.520 mm	1.520 mm
L - length	2.110 mm	2.110 mm	2.630 mm	2.630 mm
W - depth	1.000 mm	1.000 mm	1.000 mm	1.000 mm
H - height	2.350 mm	2.450 mm	2.350 mm	2.450 mm

E-AP - MODELS

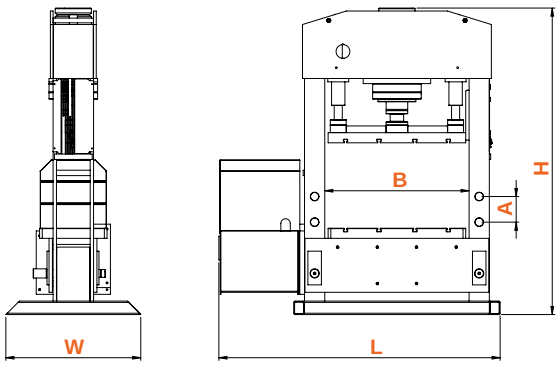

Description	E-AP 1.020-100	E-AP 1.020-150	E-AP 1.520-100	E-AP 1.520-150
A - hole distance	190 mm	190 mm	190 mm	190 mm
B - working surface	1.020 mm	1.020 mm	1.520 mm	1.520 mm
L - length	2.110 mm	2.110 mm	2.630 mm	2.630 mm
W - depth	1.000 mm	1.000 mm	1.000 mm	1.000 mm
H - height	2.275 mm	2.450 mm	2.275 mm	2.450 mm

E-WP - MODELS

UNIVERSAL HYDRAULIC WORKSHOP PRESSES

Universal Hydraulic Workshop Press

PREMIUM-LINE

PIC.: CYLINDER WITH TOOL

PIC.: E-WP 1.040-60

For technical data check page 247.

E-WP - MODELS

» steel welded construction
» easy handling
» arbitrarily stop position
» pressure display
» safety valve against overload
» table height is adjustable
» table up and down device
» control with special joystick

OPTIONAL EQUIPMENT

» foot pedal

PIC.: ADJUSTABLE HEIGHT

PIC.: MANOMETER-DISPLAY

E-WP - MODELS

TECHNICAL DATA

Description	E-WP 775-30	E-WP 1.040-60	E-WP 1.040-80	E-WP 1.070-100
cutting pressure	30 t	60 t	80 t	100 t
max. pressure	244 bar	236 bar	255 bar	263 bar
working stroke	200 mm	250 mm	250 mm	300 mm
cylinder dimensions	125 x 80 mm	180 x 120 mm	200 x 120 mm	220 x 160 mm
working speed	5 mm/sec	4 mm/sec	5 mm/sec	5 mm/sec
motor power	400 V / 50 Hz / 3 kW	400 V / 50 Hz / 4 kW	400 V / 50 Hz / 5,5 kW	400 V / 50 Hz / 5,5 kW
dimensions (L x D x H)	1.500 x 700 x 2.015 mm	1.745 x 700 x 2.100 mm	1.810 x 750 x 2.100 mm	2.110 x 1.000 x 2.290 mm
weight	400 kg	800 kg	835 kg	1.500 kg
	E-WP 775-30	**E-WP 1.040-60**	**E-WP 1.040-80**	**E-WP 1.070-100**
EAN	**4260364294767**	**4260364294774**	**4260364294781**	**4260364294798**
Item No.	**360 4775**	**360 4104**	**360 4105**	**360 4107**

Description	E-WP 1.070-150	E-WP 1.570-100	E-WP 1.570-150	E-WP 1.570-200
cutting pressure	150 t	100 t	150 t	200 t
max. pressure	244 bar	263 bar	244 bar	283 bar
working stroke	300 mm	300 mm	300 mm	300 mm
cylinder dimensions	280 x 200 mm	220 x 160 mm	280 x 200 mm	300 x 210 mm
working speed	5 mm/sec	5 mm/sec	5 mm/sec	5 mm/sec
motor power	400 V / 50 Hz / 11 kW	400 V / 50 Hz / 5,5 kW	400 V / 50 Hz / 11 kW	400 V / 50 Hz / 15 kW
dimensions (L x D x H)	2.110 x 1.000 x 2.340 mm	2.630 x 1.000 x 2.430 mm	2.630 x 1.000 x 2.430 mm	2.250 x 1.165 x 2.860 mm
weight	1.870 kg	1.600 kg	2.100 kg	4.500 kg
	E-WP 1.070-150	**E-WP 1.570-100**	**E-WP 1.570-150**	**E-WP 1.570-200**
EAN	**4260364294811**	**4260364804**	**4260364294828**	**4260364296808**
Item No.	**360 4108**	**360 4157**	**360 4158**	**360 4161**

E-WPK - MODELS

UNIVERSAL HYDRAULIC WORKSHOP PRESSES

NEW

PREMIUM-LINE

PIC.: E-WPK 1.570-100

E-WPK - MODELS
UNIVERSAL HYDRAULIC WORKSHOP PRESSES

» steel welded construction
» easy handling
» arbitrarily stop position
» pressure display
» safety valve against overload
» table height is adjustable
» table up and down device
» control with special joystick

OPTIONAL EQUIPMENT

» two-hand-control
» foot pedal

Description	E-WPK 1.070-100	E-WPK 1.070-150	E-WPK 1.570 - 100	E-WPK 1.570-150
cutting pressure	100 t	150 t	100 t	150 t
max. pressure	263 bar	244 bar	244 bar	244 bar
working stroke	300 mm	300 mm	300 mm	300 mm
cylinder dimensions	260 x 160 mm	280 x 200 mm	280 x 200 mm	280 x 200 mm
working speed	5 mm/sec	5 mm/sec	5 mm/sec	5 mm/sec
motor power	400 V / 50 Hz / 5,5 kW	400 V / 50 Hz / 11 kW	400 V / 50 Hz / 5,5 kW	400 V / 50 Hz / 11 kW
dimensions (L x D x H)	2.110 x 1.000 x 2.430 mm	2.110 x 1.000 x 2.480 mm	2.630 x 1.000 x 2.480 mm	2.630 x 1.000 x 2.480 mm
weight	1.500 kg	1.870 kg	1.980 kg	2.100 kg
	E-WPK 1.070-100	**E-WPK 1.070-150**	**E-WPK 1.570-100**	**E-WPK 1.570-150**
EAN	**4260364296822**	**4260364296839**		**4260364296846**
Item No.	**360 4109**	**360 4110**		**360 4160**

E-WPR - MODELLE

UNIVERSAL HYDRAULIC WORKSHOP PRESSES

PREMIUM-LINE

PIC.: E-WPR 1.570-150

E-WPR - MODELS

UNIVERSAL HYDRAULIC WORKSHOP PRESSES

» steel welded construction
» easy handling
» arbitrarily stop position
» pressure display
» safety valve against overload
» table height is adjustable
» table up and down device
» control with special joystick
» hydraulic cylinder laterally adjustable via handwheel

OPTIONAL EQUIPMENT

» two-hand-control
» foot pedal

Description	E-WPR 1.570-100	E-WPR 1.570-150	E-WPR 1.900-200
cutting pressure	100 t	150 t	200 t
max. pressure	263 bar	244 bar	283 bar
working stroke	300 mm	300 mm	300 mm
cylinder dimensions	220 x 160 mm	280 x 200 mm	300 x 210 mm
working speed	5 mm/sec	5 mm/sec	5 mm/sec
motor power	400 V / 50 Hz / 5,5 kW	400 V / 50 Hz / 11 kW	400 V / 50 Hz / 15 kW
dimensions (L x D x H)	2.630 x 1.000 x 2.625 mm	2.630 x 1.000 x 2.350 mm	2.570 x 1.665 x 2.860 mm
weight	1.755 kg	2.350 kg	4.800 kg
	E-WPR 1.570-100	**E-WPR 1.570-150**	**E-WPR 1.900-200**
EAN	**4260364294736**	**4260364294743**	**4260364294750**
Item No.	**360 3157**	**360 3158**	**360 3190**

E-UWP 1.020-100 / E-UWP 1.020-150
E-UWP 1.520-100 / E-UWP 1.520-150

UNIVERSAL HYDRAULIC WORKSHOP PRESSES

PREMIUM-LINE

PIC.: E-UWP 1.020-150

Universal Hydraulic Workshop Press

E-UWP

» adjustable table height
» over and under table with T-slots
» pressure steplessly adjustable
» high-performance workshop molding press with additional guide pistons on both sides

OPTIONAL EQUIPMENT

» foot pedal

Workshop press with T-slots on the table and upper beams for receiving tools, e.g. for the use as a troweling press

Description	E-UWP 1.020-100	E-UWP 1.020-150	E-UWP 1.520-100	E-UWP 1.520-150
cutting pressure	100 t	150 t	100 t	150 t
max. pressure	263 bar	244 bar	263 bar	244 bar
working stroke	300 mm	300 mm	300 mm	300 mm
working width	1.020 mm	1.020 mm	1.520 mm	1.520 mm
working speed	5 mm/sec	5 mm/sec	5 mm/sec	5 mm/sec
table size	500 x 1.020 mm	600 x 1.020 mm	500 x 1.520 mm	600 x 1.520 mm
motor power	400 V / 50 Hz / 7,5 kW	400 V / 50 Hz / 11 kW	400 V / 50 Hz / 7,5 kW	400 V / 50 Hz / 11 kW
dimensions (L x D x H)	2.110 x 1.000 x 2.350 mm	2.110 x 1.000 x 2.450 mm	2.630 x 1.000 x 2.350 mm	2.630 x 1.000 x 2.450 mm
weight	1.985 kg	2.450 kg	2.500 kg	3.100 kg
	E-UWP 1.020-100	**E-UWP 1.020-150**	**E-UWP 1.520-100**	**E-UWP 1.520-150**
EAN	**4260364294699**	**4260364294712**	**4260364294705**	**4260364294729**
Item No.	**360 1102**	**360 1103**	**360 1152**	**360 1153**

E-AP 1.020-100 / E-AP 1.020-150
E-AP 1.520-100 / E-AP 1.520-150

UNIVERSAL HYDRAULIC PRESSBRAKES

PREMIUM-LINE

PIC.: E-AP 1.020-100

UNIVERSAL HYDRAULIC PRESSBRAKES

» adjustable table height
» over and under table with T-slots
» pressure steplessly adjustable
» under table steplessly adjustable
» bottom die with quintuple prism
» material up to 8 mm

Description	E-AP 1.020-100	E-AP 1.020-150	E-AP 1.520-100	E-AP 1.520-150
cutting pressure	100 t	150 t	100 t	150 t
max. pressure	263 bar	244 bar	263 bar	244 bar
working stroke	300 mm	300 mm	300 mm	300 mm
working width	1.020 mm	1.020 mm	1.520 mm	1.520 mm
working speed	5 mm/sec	5 mm/sec	5 mm/sec	5 mm/sec
table size	500 x 1.020 mm	600 x 1.020 mm	500 x 1.520 mm	600 x 1.520 mm
motor power	400 V / 50 Hz / 7,5 kW	400 V / 50 Hz / 11 kW	400 V / 50 Hz / 7,5 kW	400 V / 50 Hz / 11 kW
dimensions (L x D x H)	2.110 x 1.000 x 2.275 mm	2.110 x 950 x 2.450 mm	2.630 x 1.000 x 2.275 mm	2.630 x 1.000 x 2.450 mm
weight	1.900 kg	2.400 kg	2.500 kg	3.100 kg
	E-AP 1.020-100	**E-AP 1.020-150**	**E-AP 1.520-100**	**E-AP 1.520-150**
EAN	**4260364294835**	**4260364294859**	**4260364294842**	**4260364294866**
Item No.	**360 2102**	**360 2103**	**360 2152**	**360 2153**

HYDRAULIC PRESS BRAKES

PREMIUM-LINE

PIC.: E-GBP 5.100-160

Heavy series for bending and edging sheet metal etc.

For technical data check page 253/254.

Powerful, universal press brakes for bending sheet metal round or sharp-edged to various angles. Different edging and inserting tools are available.

The stable machine frame made of high-quality steel with a large stand projection makes this press brake a cost-effective universal bending machine. Adjustable hydraulic pressure, mechanical parallelism as well as adjustable travel limiters ensure high repeatability.

The standard machine control system has been specially developed for sheet metal bending applications and fulfills all requirements for user-friendly bending control.

2-speeds of the press beam (start-up, pressing)

Standard-Equipment:
» interchangeable lower and upper tools
» rear stop 600 mm gauge with digital display, resolution 0.1 mm
» triple foot pedal

For detailed illustrations check page 230.

Further machine sizes on request.

E-GBP - MODELS

PRESS BRAKES

PREMIUM-LINE

PIC.: E-GBP 2.550-120

TECHNICAL DATA

Description	E-GBP 1.070-40	E-GBP 1.600-60	E-GBP 2.050-90	E-GBP 2.550-90	E-GBP 2.550-120
cutting pressure	40 t	60 t	90 t	90 t	120 t
press brake width	1.250 mm	2.100 mm	2.600 mm	880 mm	890 mm
working speed	10 mm/s	10 mm/s	10 mm/s	3.100 mm	3.100 mm
working width inside	1.070 mm	1.600 mm	2.050 mm	410 mm	410 mm
total width	1.250 mm	2.100 mm	2.600 mm	2.550 mm	2.550 mm
motor	400 V / 50 Hz / 4 kW	400 V / 50 Hz / 5,5 kW	400 V / 50 Hz / 7,5 kW	7,5 kW	11 kW
dimensions (L x D x H)	1.750 x 1.600 x 2.450 mm	2.100 x 1.600 x 2.550 mm	3.100 x 1.600 x 2.620 mm	3.600 x 1.590 x 2.600 mm	3.600 x 1.590 x 2.910 mm
weight	3.300 kg	5.400 kg	7.100 kg	7.900 kg	8.400 kg
	E-GBP 1.070-40	**E-GBP 1.600-60**	**E-GBP 2.050-90**	**E-GBP 2.550-90**	**E-GBP 2.550-120**
EAN	**4260364296853**	**4260364296860**	**4260364296877**	**4260364298833**	
Item No.	**310 2107**	**310 2160**	**310 2205**	**310 2255**	**310**

Description	E-GBP 2.550-160	E-GBP 2.550-200	E-GBP 2.550-240	E-GBP 2.550-300	E-GBP 3.550-160
cutting pressure	160 t	200 t	240 t	300 t	160 t
press brake width	890 mm	880 mm	880 mm	905 mm	880 mm
working speed	3.100 mm	3.100 mm	3.100 mm	3.100 mm	4.100 mm
working width inside	410 mm	410 mm	410 mm	500 mm	410 mm
total width	2.550 mm	2.550 mm	2.550 mm	2.550 mm	3.550 mm
motor	15 kW	18,5 kW	22 kW	22 kW	15 kW
dimensions (L x D x H)	3.600 x 1.600 x 2.910 mm	3.600 x 1.600 x 2.910 mm	3.600 x 1.610 x 2.910 mm	3.600 x 1.815 x 3.150 mm	4.600 x 1.600 x 2.910 mm
weight	9.700 kg	10.000 kg	11.000 kg	15.000 kg	12.000 kg
	E-GBP 2.550-160	**E-GBP 2.550-200**	**E-GBP 2.550-240**	**E-GBP 2.550-300**	**E-GBP 3.550-160**
EAN	**4260364298840**	**4260364298857**	**4260364298864**		**4260364298871**
Item No.	**310 2257**	**310 2558**	**310 2559**	**310**	**310 2355**

E-GBP - MODELS

PRESS BRAKES

TECHNICAL DATA

Description	E-GBP 3.550-200	E-GBP 3.550-240	E-GBP 3.550-300	E-GBP 3.550-440	E-GBP 5.100-240
cutting pressure	200 t	240 t	300 t	440 t	240 t
press brake width	880 mm	880 mm	980 mm	1.105 mm	1.100 mm
working speed	4.100 mm	4.100 mm	4.100 mm	4.100 mm	6.100 mm
working width inside	410 mm	410 mm	500 mm	500 mm	500 mm
total width	3.550 mm	3.550 mm	3.550 mm	3.550 mm	5.100 mm
motor	18,5 kW	22 kW	22 kW	30 kW	22 kW
dimensions (L x D x H)	4.600 x 1.600 x 2.910 mm	4.600 x 1.610 x 2.910 mm	4.600 x 1.820 x 3.150 mm	4.600 x 2.235 x 2.910 mm	6.600 x 1.960 x 2.910 mm
weight	12.500 kW	14.000 kg	18.500 kg	26.000 kg	25.000 kg
	E-GBP 3.550-200	**E-GBP 3.550-240**	**E-GBP 3.550-300**	**E-GBP 3.550-440**	**E-GBP 5.100-240**
EAN	**4260364298888**		**4260364298895**	**4260364298901**	**4260364298918**
Item No.	**310 2356**	**310**	**310 2358**	**310 2359**	**310 2511**

Description	E-GBP 5.100-300	E-GBP 5.100-380	E-GBP 5.100-440	E-GBP 5.100-600	E-GBP 5.100-800
cutting pressure	300 t	380 t	440 t	600 t	800 t
press brake width	1.115 mm	1.100 mm	815 mm	1.050 mm	1.050 mm
working speed	6.100 mm	6.100 mm	6.100 mm	6.100 mm	6.100 mm
working width inside	500 mm	500 mm	500 mm	500 mm	750 mm
total width	5.100 mm	5.100 mm	5.100 mm	5.100 mm	5.100 mm
motor	22 kW	30 kW	30 kW	45 kW	45 kW
dimensions (L x D x H)	6.600 x 2.600 x 2.910 mm	6.600 x 2.210 x 3.200 mm	6.600 x 2.350 x 2.910 mm	6.600 x 2.450 x 2.910 mm	6.600 x ? x 4.750 mm
weight	30.000 kg	35.000 kg	39.000 kg	55.000 kg	70.000 kg
	E-GBP 5.100-300	**E-GBP 5.100-380**	**E-GBP 5.100-440**	**E-GBP 5.100-600**	**E-GBP 5.100-800**
EAN	**4260364298925**	**4260364298932**	**4260364298949**	**4260364298956**	**4260364298963**
Item No.	**310 2512**	**310 2513**	**310 2514**	**310 2515**	**310 2516**

PIC.: WORKING AREA PRESS BRAKES (GBP 2.550-120) WITH SPECIAL ACCESSORIES QUICK-CHANGE HOLDERS AND SHEET LIFTING HOLDER

PIC.: MONITOR FOR PRESS BRAKES

The bending is one of the most frequently-used methods on sheet processing of the metal industry. However, the user needs a few data and numbers, including the stretching and the required pressing force, for correct binding. To calculate these figures, there is a software on the market.

Welding Positioner and Thread Cutting Machines

SP 300 SM / SP 30 M / SP 300 M

WELDING POSITIONER

PIC.: SP 300 SM

PIC.: SP 30 M

NEW

PIC.: SP 300 M

SP 300 SM / SP 30 M / SP 300 M

When welding, the position and accessibility of the part welded are important. Welding positioners and rotary welding tables are a great help here. Robust drive technology and stable construction ensure the positioning of the workpiece. Different sizes and designs are available.

Description	SP 300 SM	SP 30 M	SP 300 M
max. horizontal load	300 kg	30 kg	300 kg
max. vertical load	150 kg	20 kg	150 kg
table height	710 / 760 / 810 / 860 mm	370 mm	1.020 mm
table diameter	-	-	-
table speeds	-	-	-
table drive	manual	manual	manual
tilt angle	22,5° / 45° / 90°	-	-
angle adjustment	-	-	-
weight	86 kg	28 kg	135 kg

	SP 300 SM	SP 30 M	SP 300 M
EAN	**4260364297584**	**4260364297591**	**4260364297607**
Item No.	**229 0001**	**229 0002**	**229 0003**

SP 220 / SP 350 / SP 500

WELDING POSITIONER

PIC.: SP 350

PIC.: SP 500

SP 220 / SP 350 / SP 500

When welding, the position and accessibility of the part welded are important. Welding positioners and rotary welding tables are a great help here. Robust drive technology and stable construction ensure the positioning of the workpiece. Different sizes and designs are available.

Description	SP 220	SP 350	SP 500
max. horizontal load	220 kg	350 kg	500 kg
max. vertical load	100 kg	120 kg	250 kg
table height	450 mm	480 mm	660 mm
table diameter	330 mm	330 mm	550 mm
table speeds	0-5 min^{-1}	0 - 5 min^{-1}	0 - 5 min^{-1}
table drive	125 W	125 W	400 W
tilt angle	0 - 135°	0 - 135°	-45° bis +90°
angle adjustment	Manual	Manual	electric
weight	34 kg	38 kg	220 kg

	SP 220	SP 350	SP 500
EAN	**4260364297614**	**4260364297621**	**4260364297638**
Item No.	**229 1001**	**229 1002**	**229 1003**

GSA-P 900-12 / GSA-P 900-12 HV
GSA-E 1.000-16 / GSA-E 1.000-16 HV
GSA-E 1.200-24 / GSA-E 1.200-24 HV

THREADING MACHINES

PIC.: GSA-P 900-12 WITH OPTIONAL CLAMPING TABLE

PIC.: GSA-E 1.200-24 WITH OPTIONAL CLAMPING TABLE

GSA-P 900-12 / GSA-P 900-12 HV / GSA-E 1.000-16 / GSA-E 1.000-16 HV / GSA-E 1.200-24 / GSA-E 1.200-24 HV

Thread cutting machines with universal swiveling articulated arm for fast and safe thread cutting at different positions. Simple operation by push button, optionally with touch panel. Available in different versions with pneumatic or electric drive, designed for the use of ISO holders for the taps.

Description	GSA-P 900-12	GSA-P 900-12 HV	GSA-E 1.000-16	GSA-E 1.000-16 HV	GSA-E 1.200-24	GSA-E 1.200-24 HV
cutting capacity	M3 - M12	M3 - M12	M3 - M16	M3 - M16	M6 - M24	M6 - M24
cutting direction	vertical	vertical and horizontal	vertical	vertical and horizontal	vertical	vertical and horizontal
speeds	max. 400 min^{-1}	max. 400 min^{-1}	max. 300 min^{-1}	max. 300 min^{-1}	max. 200 min^{-1}	max. 200 min^{-1}
boom radius	max. 900 mm	max. 900 mm	max. 1.000 mm	max. 1.000 mm	max. 1.200 mm	max. 1.200 mm
drive	pneumatic	pneumatic	electric	electric	electric	electric
weight	20 kg	21 kg	25 kg	26 kg	50 kg	52 kg
	GSA-P 900-12	**GSA-P 900-12 HV**	**GSA-E 1.000-16**	**GSA-E 1.000-16 HV**	**GSA-E 1.200-24**	**GSA-E 1.200-24 HV**
EAN	**4260364297713**	**4260364297737**	**4260364297744**	**4260364297751**	**4260364297720**	**4260364297768**
Item No.	**215 0012**	**215 0112**	**215 1016**	**215 1116**	**215 1024**	**215 1124**

Description	clamping table small	clamping table large
clamping area	800 x 500 mm	900 x 600 mm
for	GSA-P 900-12 GSA-P 900-12 HV GSA-E 1.000-16	GSA-E 1.000-16 HV GSA-E 1.200-24 GSA-E 1.200-24 HV
	clamping table small	**clamping table large**
EAN	**4260364297867**	**4260364297874**
Item No.	**520 8050**	**520 9060**

A mobile clamping table with cabinet door is optionally available for all models.

PIC.: CLAMPING TABLE

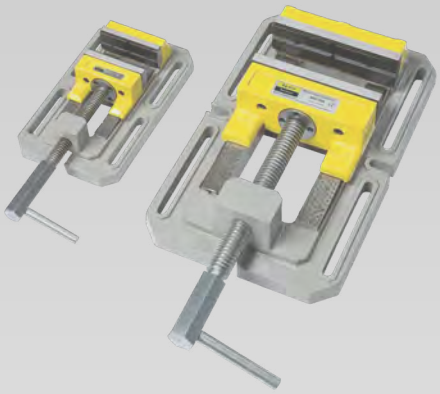

Equipment

MSE 75 / MSE 100 / MSE 125 / MSE 150

MACHINE VICES

PIC.: MSE 75 / MSE 100

MACHINE VICES WITH PRISMS

» easy vices serie in high quality
» smooth running with exact jaw guides, also at a high axial load
» rolled trapezoidal spindle
» smooth running
» different possibilities of positioning long holes in the foot of the vice

Description	MSE 75	MSE 100	MSE 125	MSE 150
A	12,5	12,5	12,5	14,5
B	55	90	110	130
C	55	74	80	100
D	30	46	46	56
E	126	165	186	222
F	270	350	400	455
G	75	100	125	150
H	100	130	150	170
I	130	165	182	208
weight	1,7 kg	3,2 kg	4,5 kg	6,2 kg
EAN	**4260364292664**	**4260364292671**	**4260364292688**	**4260364292695**
Item No.	**121 0075**	**121 0100**	**121 0125**	**121 0150**

MSI 100 / MSI 140 / MSI 200

MACHINE VICES

PIC.: MSI 100 / MSI 200

Description	MSI 100	MSI 140	MSI 200
A	350 - 460	455 - 610	578 - 788
B	88	105	163
C	110	150	200
D	12	14	16
E	19	23	28
F	100	140	200
G	136	189	250
H	170	230	290
I	12	14	14
J	216	290	406
weight	8,7 kg	18 kg	35 kg
EAN	**4260364292701**	**4260364292718**	**4260364292725**
Item No.	**121 2100**	**121 2140**	**121 2200**

MACHINE VICE

» drill vices in industrial quality
» manually trimmed bearing surfaces
» high quality cast frame
» stable and moveable jaw-thereby no tilting
» replaceable prismatic jaws
» different possibilities of positioning long holes in the foot of the vice

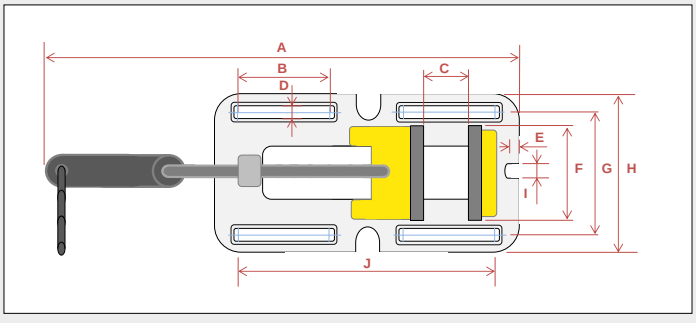

MS 100

MACHINE VICE

MS 100

» changeable prismatic jaws
» supplied with pin for powerful clamping
» smooth running with exact jaw guides, also at a high axial load
» multiple mounting and clamping facilities through slots in base

Description	MS 100
jaw width	100 mm
jaw open	105 mm
weight	4 kg
EAN	**4260364292633**
Item No.	**120 0100**

MS 125

MACHINE VICE

MS 125

» changeable prismatic jaws
» supplied with pin for powerful clamping
» smooth running with exact jaw guides, also at a high axial load
» multiple mounting and clamping facilities through slots in base

Description	MS 125
jaw width	125 mm
jaw open	125 mm
weight	10 kg
EAN	**4260364292640**
Item No.	**120 0125**

MSS 135

QUICK ACTION VICE

MSS 135

IDEAL FOR SERIAL PRODUCTION; TENSIONS VIA HANDLEBAR ABOUT ECCENTRIC LEVER

» changeable prismatic jaws
» quick release lock via the eccentric lever
» supplied with pin for powerful clamping
» multiple mounting and clamping facilities through slots in base

Description	MSS 135
jaw width	135 mm
jaw open	145 mm
weight	15 kg
EAN	**4260364292749**
Item No.	**120 1135**

MSS 180

QUICK ACTION VICE

MSS 180

» changeable prismatic jaws
» supplied with pin for powerful clamping
» smooth running with exact jaw guides, also at a high axial load
» multiple mounting and clamping facilities through slots in base

Description	MSS 180
jaw width	180 mm
jaw open	260 mm
weight	32 kg
EAN	**4260364292756**
Item No.	**120 1180**

FS 16-100

MILLING VICE

FS 16-100

» solid construction, swivel base is graduated through 360°
» made of high-grade cast iron
» clear readable scales
» hardened and ground bearing surface
» changeable, hardened and ground clamping jaws
» absolutely solid fit of the workpart during treatment

Description	FS 16-100
jaw width	100 mm
jaw open	90 mm
jaw height	33 mm
dimensions (L x W x H)	360 x 230 x 120 mm
weight	16 kg
EAN	**4260364292763**
Item No.	**520 3050**

FS 16-160

MILLING VICE

FS 16-160

» solid construction, swivel base is graduated through 360°
» made of high-grade cast iron
» clear readable scales
» hardened and ground bearing surface
» changeable, hardened and ground clamping jaws
» absolutely solid fit of the workpart during treatment

Description	FS 16-160
jaw width	160 mm
jaw open	145 mm
jaw height	45 mm
dimensions (L x W x H)	530 x 260 x 155 mm
weight	39 kg
EAN	**4260364292770**
Item No.	**520 3060**

FS 16-200

MILLING VICE

FS 16-200

» solid construction, swivel base is graduated through 360°
» made of high-grade cast iron
» clear readable scales
» hardened and ground bearing surface
» changeable, hardened and ground clamping jaws
» absolutely solid fit of the workpart during treatment

Description	FS 16-200
jaw width	200 mm
jaw open	220 mm
jaw height	50 mm
dimensions (L x W x H)	550 x 350 x 180 mm
weight	54 kg
EAN	**4260364292787**
Item No.	**520 3070**

FMS 100 / FMS 125 / FMS 150

MILLING VICES

PIC.: FMS 100

Description	FMS 100	FMS 125	FMS 150
E	100	125	150
A	267	345	421
B	106	128	160
H	75	98	105
R	62	85	114
S	395	370	462
a	160	208	245
s	114	150	175
h1	30	37	40
h2	25	30	40
g1	13	12	16
g2	13	13	13
weight	11 kg	17 kg	28 kg
EAN	**4260364292794**	**4260364292800**	**4260364292817**
Item No.	**521 0100**	**521 0125**	**521 0150**

HIGH-PRECISION MILLING VICE

» solid construction for drilling, milling, grinding
» hardened and ground bearing surface
» changeable, hardened and ground clamping jaws
» made of high-grade cast iron
» swivel base is graduated through 360°

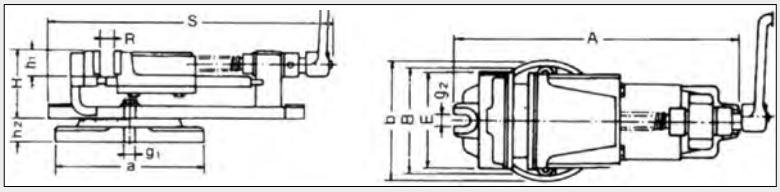

FMSN 100 / FMSN 125 / FMSN 150

MILLING VICES

PIC.: FMSN 100

Description	FMSN 100	FMSN 125	FMSN 150
A	100	125	150
B	31	33	46
C	101	108	146
a	219	369	425
b	165	193	209
c	88	96	111
d	247	254	298
e	31	34	41
f	6	7	9
weight	18,8 kg	29 kg	36 kg
EAN	**4260364292824**	**4260364292831**	**4260364292848**
Item No.	**521 1100**	**521 1125**	**521 1150**

HIGH-PRECISION MILLING VICE

» secure straining of the workpart
» made of high-grade cast iron
» hardened and ground bearing surface
» changeable, hardened and ground clamping jaws
» clamping jaws straining outwards by tramming
» secured spindle
» swivel base is graduated through 360°

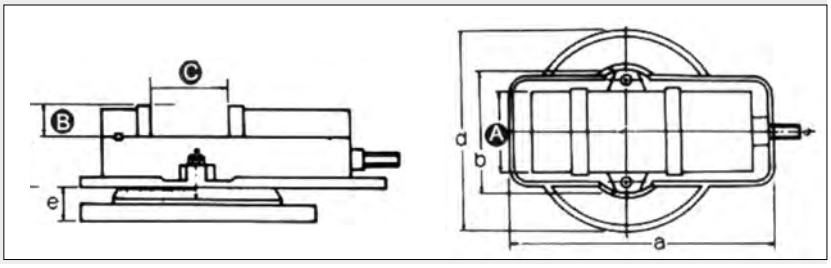

UPS 100

UNIVERSAL MACHINE VICE

UPS 100
with 4 clamping surfaces

» robust and solid construction
» vice made of high quality cast iron
» horizontal rotation of the jaws from 0° to 90° in each direction.
» Turntable rotatable by 360°
» ideal for clamping round material
» horizontal and vertical

Description	UPS 100
jaw width	100 mm
jaw open	100 mm
jaw height	37 mm
dimensions (L x D x H)	355 x 162 x 118 mm
weight	22 kg
EAN	**4260364296938**
Item No.	**520 4010**

FS 3D-100

3D-MACHINE VICE

FS 3D-100
» stable and solid construction
» swivel and tilting vice
» swivel base is graduated through 360°
» changeable, hardened and ground clamping jaws
» clear readable scales

Description	FS 3D-100
jaw width	100 mm
jaw open	105 mm
jaw height	40 mm
dimensions (L x D x H)	420 x 280 x 190 mm
weight	32 kg
EAN	**4260364292862**
Item No.	**520 3310**

AC 60 / AC 100

ANGLE MACHINE VICES

AC 60 / AC 100
IDEAL FOR WELDING
» for welding of different material thickness in the right angle
» different thick work parts can be clamped in the right angle by the pivoting axis

Description	AC 60	AC 100
jaw width	60 mm	100 mm
jaw open	60 mm	105 mm
jaw height	35 mm	60 mm
dimensions (L x D x H)	200 x 200 x 70 mm	300 x 300 x 100 mm
weight	4,8 kg	11 kg
EAN	**4260364292879**	**4260364292886**
Item No.	**520 0006**	**520 0010**

120x400 mm / 180x500 mm
180x700 mm / 210x730 mm

CROSS TABLES

» dovetail slideway adjustable
» channeling for cooling liquid drain
» adjustable fine scale of hand wheels with 0,05 mm disposition

TECHNICAL DATA

Description	120 x 400	180 x 500	180 x 700	210 x 730
length	506 mm	748 mm	945 mm	1.065 mm
depth	400 mm	483 mm	483 mm	555 mm
height	140 mm	148 mm	169 mm	200 mm
T-slot size	10 mm	12 mm	12 mm	14 mm
table (W x D)	120 x 400 mm	180 x 500 mm	180 x 700 mm	210 x 730 mm
table load max.	70 kg	120 kg	120 kg	150 kg
foot width	220 mm	274 mm	274 mm	280 mm
foot length	280 mm	340 mm	340 mm	362 mm
travelling X-axis	220 mm	287 mm	480 mm	480 mm
travelling Y-axis	165 mm	167 mm	170 mm	210 mm
distance mounting hole X-axis	210 mm	260 mm	250 mm	270 mm
distance mounting hole Y-axis	160 mm	220 mm	220 mm	300 mm
weight	25 kg	45 kg	52 kg	73 kg
EAN	**4260364292893**	**4260364292909**	**4260364292916**	**4260364292923**
Item No.	**520 2120**	**520 2185**	**520 2187**	**520 2210**

RTHV 150 / RTHV 200

ROTARY TABLES

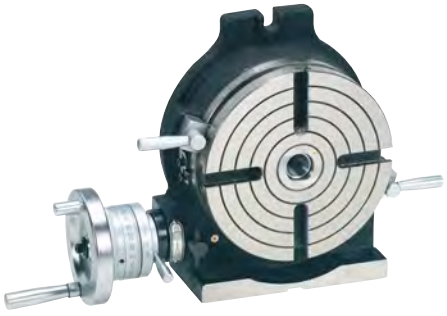

» applicable to milling- and drilling work on horizontal or vertical mills, drills
» totally ground finish provides high precision and smooth rotation
» worm gear ratio is 90:1
» scale dividing through scale adjustable nonius
» circumference of the table is scaled 360°
» table plate can be mounted by two clamps
» table plate made of high quality Meehanite cast iron
» 1 Dial = 4° adjustment

Description	RTHV 150	RTHV 200
table diameter	150 mm	200 mm
centre heigth	100 mm	135 mm
table height	80 mm	105 mm
centre sleeve	MT 2	MT 3
slot size	10 mm	12 mm
dimensions (L x D x H)	330 x 200 x 90 mm	400 x 275 x 110 mm
weight	14 kg	26 kg
EAN	**4260364292930**	**4260364292947**
Item No.	**535 2150**	**535 2200**

UNIVERSAL HORIZONTAL AND VERTICAL ROTARY TABLES

E-MSP M / E-MSP P / E-MSP U

MAGNETIC CLAMPING PLATES

PREMIUM-LINE

Powerful electromagnet clamping plates for use on flat grinding machines, milling machines, presses, injection molding machines and special machines.

The E-MSP P models are designed for professional use, the E-MSP U models for maximum holding power.
The model E-MSP M2030 is suitable for medium-strong holding force or for parallel use of several magnetic plates.
Please do not hesitate to ask if you have any questions.

TECHNICAL DATA

Description	Size (L x D x H) mm	holding force	Volt	EAN	Item No.
E-MSP M2030	300 x 200 x 68	3 t	230	4260364296945	630 0230
E-MSP P4045	450 x 400 x 68	15 t	230	4260364296952	630 1445
E-MSP P4065	650 x 400 x 68	19 t	230	4260364296969	630 1465
E-MSP P4080	800 x 400 x 68	25 t	230	4260364296976	630 1480
E-MSP P40100	1.000 x 400 x 68	36 t	230	4260364296983	630 1410
E-MSP P40120	1.200 x 400 x 68	42 t	230	4260364296990	630 1412
E-MSP U4040	400 x 400 x 58	16 t	230	4260364297003	630 2240
E-MSP U4060	600 x 400 x 58	20 t	230	4260364297010	630 2460
E-MSP U4080	800 x 400 x 58	27 t	230	4260364297027	630 2480
E-MSP U40100	1.000 x 400 x 58	38 t	230	4260364297034	630 2410

QUICK ACTION DRILL CHUCK / DRILL SET / MORSE TAPER DRILL SET

RÖHM - QUICK ACTION DRILL CHUCK

RÖHM - QUICK ACTION DRILL CHUCK
B 16 1-13 MM
B 16 3-16 MM

MADE IN GERMANY

» quality keyless drill chuck
» universal service

Description	RÖHM 1-13 mm	RÖHM 3-16 mm
EAN	4260364293128	4260364293135
Item No.	510 3013	510 3016

THREADING ATTACHMENT

THREADING ATTACHMENT M3-M12
» with taper MT 2
» torque adjustable M3 - M12
» integrated rapid reverse
» quick action drill chuck for thread drill

Description	Threading Attachment
EAN	4260364293142
Item No.	510 3212

HSS DRILL SET

HSS DRILL SET
25 PCS. 1-13 MM ZYLINDRIC
» HSS drill
» for steel, light metals, plastic and wood
» 0,5 mm increasing from 1-13 mm
» in practical sheet box

Description	HSS Drill Set
EAN	4260364293159
Item No.	510 9013

MORSE TAPER DRILL CASE 1

MORSE TAPER DRILL CASE 1
14,5 / 15 / 16 / 17 / 18 / 19 / 20 / 21 / 22 / 23 MM
» HSS spiral drills
» 10 pcs.
» several drills equipped with MT 2

Description	Morse Taper Drill Case 1
EAN	4260364293166
Item No.	510 1423

MORSE TAPER DRILL CASE 2

MORSE TAPER DRILL CASE 2
14,5 / 16 / 18 / 20 / 22 / 24 / 26 / 28 / 30 MM
» HSS spiral drills
» 9 pcs.
» 14, 5 - 22 mm drills equipped with MT 2
» 24 - 30 mm drills equipped with MT 3

Description	Morse Taper Drill Case 2
EAN	4260364293173
Item No.	510 1430

THE FLOW HOLE MOULDING PROCESS

The flow hole moulding process enables drill holes or thread core holes to be drilled very quickly in thin-walled metallic material without the formation of cutting chips. Specially shaped "flow drills" and higher spindle speeds generate friction, which causes the worpiece to melt at this point, resulting in a round bore. The excess material "flows" to the edge of the hole. In the case of thin material, this process produces a reinforcement (bead) around the bore, i.e. longer threads can be produced.
This technique can be used for material thicknesses up to approx. 12 mm. Drillings are possible up to 4 times the original material thickness.

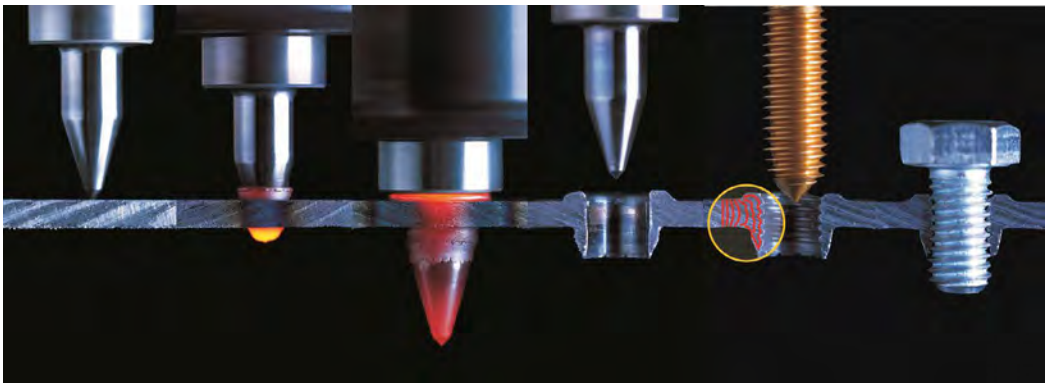

The bead around the hole is created by the standard flow drill on the top and bottom of the sheet material. This is not always desired, which is why there is also the "Cut" version, which removes the bead from the top of the sheet during the process.

In addition, both versions are available in longer versions. More information on request; also task-specific advice available.

Standard Thread	Core Hole mm	Flow Hole Forms			Thread Forms	
		Rotation Speed min^{-1}	Turning Moment Nm	KW / performance	Rotation Speed min^{-1}	Turning Moment Nm
M 3	2,7	3.000	2,5	0,7	1.500	1,3
M 4	3,7	2.600	3	0,8	1.100	3
M 5	4,5	2.500	4	0,9	900	4,9
M 6	5,4	2.400	5	1,1	800	9,3
M 8	7,3	2.100	7	1,5	600	19
M 10	9,2	1.800	10	1,7	380	39
M 12	10,9	1.500	14	1,9	300	50
M 14	13	1.500	16	2,2	300	55
M 16	14,8	1.400	19	2,5	200	57
M 20	18,7	1.200	29	3	160	105

Description	Flow Hole Moulding
EAN	4260364297041
Item No.	511 0001

The flow hole moulding process is force intensive and requires machines with a powerful motor and a high driving speed. Price on request; we are happy to help.

MORSE TAPERS / REDUCING SLEEVES EXTENSION SLEEVES / LIFE CENTER

MORSE TAPER / SLEEVES / LIFE CENTER

REDUCING SLEEVES

Description	EAN	Item No.
Reducing Sleeves MT 2 to MT 1	**4260364293227**	**510 1021**
Reducing Sleeves MT 3 to MT 2	**4260364293234**	**510 1032**
Reducing Sleeves MT 4 to MT 2	**4260364293241**	**510 1042**
Reducing Sleeves MT 4 to MT 3	**4260364293258**	**510 1043**
Reducing Sleeves MT 5 to MT 2	**4260364293265**	**510 1052**
Reducing Sleeves MT 5 to MT 3	**4260364293272**	**510 1053**
Reducing Sleeves MT 5 to MT 4	**4260364293289**	**510 1054**

EXTENSIONS SLEEVES

Description	EAN	Item No.
Extension Sleeves MT 2 to MT 3	**4260364293296**	**510 1123**
Extension Sleeves MT 3 to MT 4	**4260364293302**	**510 1134**

MORSE TAPERS

Description	EAN	Item No.
Morse Taper MT 2 B16	**4260364293180**	**510 0216**
Morse Taper MT 3 B16	**4260364293197**	**510 0316**
Morse Taper MT 4 B16	**4260364293203**	**510 0416**
Morse Taper MT 5 B16	**4260364293210**	**510 0516**

LIFE CENTER MT 2/3/4

Description	EAN	Item No.
Life Center MT 2	**4260364293319**	**510 0517**
Life Center MT 3	**4260364293326**	**510 0518**
Life Center MT 4	**4260364293333**	**510 0519**

REVOLVING CENTER WITH REPLACEMENT LATHE CENTERS

» MT 2
» 7 replaceable lathe centers
» precision needle roller bearings ensures
» supplied in a solid wooden box

Description	EAN	Item No.
revolving center with replacement lathe centers	**4260364293340**	**510 0620**

SPW 10 / SPW 12 / SPW 14

CLAMP KIT

CLAMP KIT SPW 10 52-PCS.

» handy wall unit
» metric threads
» drawbar M 10
» 24 pcs. studs 4 of each length
75 / 100 / 125 / 150 / 175 / 200 mm
» 6 pcs. T-nuts 12 mm
» 6 pcs. flanged nuts
» 4 pcs. coupling nuts
» 6 pcs. step clamps
» 6 pcs. step blocks

Description	Clamp Kit SPW 10	Clamp Kit SPW 12	Clamp Kit SPW 14
EAN	4260364293425	4260364293432	4260364293449
Item No.	535 5210	535 5212	535 5214

PRECISION PARALLELS

PRECISION PARALLELS 28-PCS. OF HIGH QUALITY STEEL

» set of 14 pairs in a box
» made of high quality steel
» supplied in wooden case
» dimensions (L x W) 150 x 10
» dimensions (H) 14 / 16 / 18 / 20 / 22
24 / 26 / 28 / 30 / 32 / 35 / 40 / 45 / 50 mm
» fine ground to 0,01 mm accurately
» for precision work for parallel holding fixture of work parts in vices or marking plates

Description	Precision Parallels
EAN	4260364293357
Item No.	535 0028

COLLET CHUCKS AND COLLETS

COLLET CHUCK MK
15-PCS. IN PLASTIC CASE MT 2
15-PCS. IN PLASTIC CASE MT 3
15-PCS. IN PLASTIC CASE MT 4
COLLET CHUCK ISO
15-PCS. IN PLASTIC CASE ISO 30
15-PCS. IN PLASTIC CASE ISO 40

» collet chuck
» hook wrench
» 15 collets: 3 / 4 / 5 / 6 / 7 / 8 / 9 / 10 / 11 / 12 / 13 / 16 / 18 / 20 / 25 mm

Description	MT 2	MT 3	MT 4	ISO 30	ISO 40
acceptance	MT 2	MT 3	MT 4	ISO 30	ISO 40
dimensions of the case (L x D x H)	350 x 270 x 100 mm	350 x 270 x 100 mm	350 x 270 x 100 mm	350 x 270 x 100 mm	350 x 270 x 100 mm
weight	5 kg	5 kg	5 kg	5 kg	5 kg
EAN	**4260364293371**	**4260364293388**	**4260364293395**	**4260364293401**	**4260364293418**
Item No.	**535 3502**	**535 3503**	**535 3504**	**535 3530**	**535 3540**

HSS MILLING CUTTERS

CONTENT
10 PCS - 2 cutting edges
» DIN 327 D, short type with 2 cutting edges
» For milling wedge / drill grooves, as well as cutouts from the workpiece center, vertical or lateral milling operations possible with cyl. shank and lateral driving surfaces DIN 1835 B
» size 3 / 4 / 5 / 6 / 8 / 10 / 12 / 14 / 18 / 20 mm

10 pieces - 4 cutting edges
» DIN 844 B, short type with 4 cutting edges
» with 30° right spiral; thats why you have a good chip removal
» front teeth center cutting
» for normal to solid materials with cyl. shank and lateral driving surfaces DIN 1835 B
» size 3 / 4 / 5 / 6 / 8 / 10 / 12 / 14 / 18 / 20 mm

HSS MILLING CUTTERS 20-PCS. TIN-COATED
» vapourised titanium applied in reactive gas
» higher hardness and stability of tool cutters
» 2 - 5 times longer life
» double cutting capacity
» better work piece surface

Description	HSS Milling Cutters
EAN	**4260364293364**
Item No.	**535 1020**

QUICK CHANGE TOOL MULTIFIX TYPE A / B / C

QUICK CHANGE TOOL TYP MULTIFIX

» multifix “Type A” for metal lathes MD 170, 250, 300
» Multifix “Type B” for metal lathes MD 360, 420, 460
» tool holder head and toolholders equipped with profile ground toothing
» rigid clamping on large area provide vibration free operation
» repeating accuracy 0,01 mm
» 40 different angular positions
» angle scale
» adjust height cutting edge exactly and quickly

All prices without assembly
Adjustment and factory assembly according to effort

QUICK CHANGE TOOL TYP MULTIFIX

SCOPE OF DELIVERY

TYPE A:
» 1 pcs. tool holder head “Type A”
» 3 pcs. tool holders 20 x 90 mm for square tools
» 1 pcs. tool holder 20 x 90 mm for round tools

TYPE B:
» 1 pcs. tool holder head “Type B”
» 3 pcs. tool holders 26 x 120 mm for square tools
» 1 pcs. tool holder 26 x 120 mm for round tools

TYPE C:
» 1 pcs. tool holder head “Type C"
» 3 pcs. tool holders 32 x 150 mm for square tools
» 1 pcs. tool holder 26 x 120 mm for round tools

Description	Multifix “Type A"	Multifix “Type B"	Multifix “Type C"
recommended turning diameter	150 - 300 mm	300 - 500 mm	400 - 700 mm
lathe tools	14 - 20 mm	20 - 25 mm	20 - 32 mm
EAN	**4260364293494**	**4260364293500**	**4260364297058**
Item No.	**545 2201**	**545 2202**	**545 2203**

JAW CHUCK

MANUFACTURER: BISON

3-JAW CHUCK

» 3-jaw chuck with CAMLOCK short taper receptacle, chuck body made of high-quality cast iron with ground working and guide surfaces for permanent clamping and repeat accuracy
» high concentricity accuracy
» uniform clamping forces
» also suitable for workpieces with specific
» unbalance up to max. 25 mm/kg
» hand-operated lathe chucks with spiral ring, centrically clamping
» body made of high-quality cast iron
» flat spiral ring, drop-forged, balanced and hardened
» flanks of the spiral plane and jaws are ground
» high concentricity, better than DIN 6386

SCOPE OF DELIVERY

» Chuck key
» hard one-piece internal clamping jaws
» hard one-piece external clamping jaws

Additional clamping jaws as well as base and top jaws on request.
When ordering additional jaws, complete type description of the lathe chuck is required.

Description 3-jaw chuck	BiS-3 100/3	BiS-3 125/4	BiS-3 160/5	BiS-3 200/5
diameter	100 mm	125 mm	160 mm	200 mm
cone	3	4	5	5
bore	20 mm	32 mm	42 mm	55 mm
chuck width	50 mm	59,5 mm	68 mm	78 mm
weight	2,8 kg	5 kg	9 kg	19 kg
EAN	**4260364298970**	**4260364298987**	**4260364298994**	**4260364299007**
Item No.	**546 1003**	**546 1254**	**546 1605**	**546 2005**

Description 3-jaw chuck	BiS-3 200/6	BiS-3 250/6	BiS-3 315/7	BiS-3 315/8
diameter	200 mm	250 mm	315 mm	315 mm
cone	6	6	7	8
bore	55 mm	76 mm	103 mm	103 mm
chuck width	91 mm	103,5 mm	117,7mm	117,7 mm
weight	19 kg	17 kg	21,5 kg	21,5 kg
EAN	**4260364299014**	**4260364299021**	**4260364299038**	**4260364299045**
Item No.	**546 2006**	**546 2506**	**546 3157**	**546 3158**

JAW CHUCK

MANUFACTURER: BISON

4-JAW CHUCK

» 4-jaw chuck with CAMLOCK short taper receptacle, chuck body made of high-quality cast iron with ground working and guide surfaces for permanent clamping and repeat accuracy
» high concentricity accuracy
» uniform clamping forces
» also suitable for workpieces with specific
» unbalance up to max. 25 mm/kg
» hand-operated lathe chucks with spiral ring, centrically clamping
» body made of high-quality cast iron
» flat spiral ring, drop-forged, balanced and hardened
» flanks of the spiral plane and jaws are ground
» high concentricity, better than DIN 6386

SCOPE OF DELIVERY

» Chuck key
» hard one-piece internal clamping jaws
» hard one-piece external clamping jaws

Additional clamping jaws as well as base and top jaws on request.
When ordering additional jaws, complete type description of the lathe chuck is required.

Description 4-jaw chuck	BiS-4 125/4	BiS-4 160/4	BiS-4 160/5	BiS-4 200/4	BiS-4 200/5
diameter	125 mm	160 mm	160 mm	200 mm	200 mm
cone	4	4	5	4	5
bore	32 mm	42 mm	42 mm	55 mm	55 mm
chuck width	56 mm	81,5 mm	81,5 mm	91 mm	91 mm
weight	5 kg	10 kg	10 kg	13 kg	13 kg
EAN	**4260364299052**	**4260364299069**	**4260364299076**	**4260364299083**	**4260364299090**
Item No.	**546 1254**	**546 1604**	**546 1605**	**546 2004**	**546 2005**

Description 4-jaw chuck	BiS-4 200/6	BiS-4 250/6	BiS-4 250/8	BiS-4 315/6	BiS-4 400/8
diameter	200 mm	250 mm	250 mm	315 mm	400 mm
cone	6	6	8	6	8
bore	55 mm	76 mm	76 mm	103 mm	136 mm
chuck width	91 mm	103,5 mm	103,5 mm	117,7 mm	128,5 mm
weight	13 kg	17,5 kg	17,5 kg	21,5 kg	27 kg
EAN	**4260364299106**	**4260364299113**	**4260364299120**	**4260364299137**	**4260364299144**
Item No.	**546 2006**	**546 2506**	**546 2508**	**546 3156**	**546 4008**

TURNING TOOL 6-PCS. + 7-PCS. HM-TURNING PLATES

TURNING TOOL / HM-TURNING PLATES

TURNING TOOL 6-PCS. 10 MM / 6-PCS. 12 MM

CONSITS OF 6-PCS. CUTTING TOOLS 10 MM OR 12 MM

» 2 left roughing tools
» right roughing tool
» recessing tool 30°
» recessing tool 80°
» lathe tools
» supplied in a solid box

Description	Turning Tool	Turning Tool
Completion	10 MM	12 MM
EAN	4260364293517	4260364293524
Item No.	545 0210	545 0212

TURNING TOOLS WITH CUTTING TOOLS FOR INTERNAL AND EXTERNAL 6-PCS. 10 MM / 6-PCS. 12 MM

» 2 boring tools 55° and 60°
» 2 external tools 55° and 60°
» 1 booring tool
» 1 external tool right
» supplied in a solid box

Description	10 mm	12 mm
EAN	4260364293531	4260364293548
Item No.	545 1210	545 1212

TURNING TOOL HM IN SOLID PLSTIC BOX

» suitable for turning plates with HM inserts
» cutting tool 1 SCLCL
» cutting tool 2 SCSCR
» cutting tool 3 SCBCR
» cutting tool 4 SCKCR
» cutting tool 5 SCMCN
» cutting tool 6 SCLCR
» cutting tool 7 SOØ SCLCR

Description	12 mm	16 mm
EAN	4260364293555	4260364293562
Item No.	545 2212	545 2216

HM-TURNING PLATES

» Suitable for turning plates with HM inserts

Description	HM-Turning Plates
EAN	4260364293579
Item No.	545 1116

STANDS

UNIVERSAL STAND

» suitable stand for milling and drilling machines
» with centre console
» disc with cooling liquid drain

Description	Universal Stand (BFM 45)
dimensions (L x D x H)	780 x 580 x 630 mm
weight	22 kg
EAN	**4260364293067**
Item No.	**535 1035**

Description	Stand for TU 1803 Vario
dimensions (L x D x H)	840 x 420 x 760 mm
weight	42 kg
EAN	**4260364297065**
Item No.	**546 1180**

Description	Stand for BFM 20 Vario / 20 L Vario	Stand for BFM 35 Vario
dimensions (L x D x H)	340 x 420 x 800 mm	375 x 540 x 800 mm
weight	35 kg	37 kg
EAN	**4260364293104**	**4260364293111**
Item No.	**535 0020**	**535 0035**

Description	Stand for TU 2004 Vario	Stand for TU 2406 Vario	Stand for TU 2506 Vario	Stand for TU 2807 Vario	Stand for TU 3018 Vario
dimensions (L x D x H)	960 x 420 x 760 mm	960 x 420 x 760 mm	1.100 x 420 x 760 mm	1.250 x 440 x 760 mm	1.250 x 460 x 760 mm
weight	48 kg	48 kg	50 kg	52 kg	54 kg
EAN	**4260364297515**	**4260364297522**	**4260364297539**	**42603642937546**	**42603642937553**
Item No.	**546 0204**	**546 0246**	**546 0256**	**546 0287**	**545 0318**

MACHINE FEET

SMALL / MEDIUM / LARGE

MACHINE FEET
LEVELLING OSCILLATING ELEMENT

» oscillating isolated
» without ankering
» height adjustable

Description	small	medium	large
diameter	80 mm	120 mm	160 mm
height	30 mm	30 mm	40 mm
threading	M10	M12	M16
weight	0,3 kg	1 kg	2 kg
EAN	**4260364293036**	**4260364293043**	**4260364293050**
Item No.	**545 2501**	**545 2502**	**545 2503**

RB 290 / RB 1.100

ROLLER BLOCK

PIC.: RB 290

PIC.: RB 1.100

Description	RB 290	RB 1.100
height of stand	575 - 900 mm	620 - 1.000 mm
width of rollers	290 mm	350 mm
max. load	150 kg	300 kg
weight	6 kg	23 kg
EAN	**4260364292954**	**4260364292961**
Item No.	**530 1115**	**530 1100**

RB 290 / RB 1.100
ROLLER BLOCK

» stepless adjustable

MR 4 / MR 7

ROLLER STANDS / ANSCHLAG- UND MESSSYSTEM

ROLLER STAND

Height adjustable material pedestal for material depot and material feeding of work parts at metal saws.

» handling system for plating of long and heavy work parts
» applicable for metal band saws, circular saw benches etc.
» roller stand with stepless height adjustment and arrest
» safe and heavy - duty workpiece support via robust, pressure resistant steel reel
» optional PVC coated reels mountable
» massive construction made of multiple edged special profile
» interminable prolongable

Description	MR 4	MR 7
carrying roller diameter	60 mm	60 mm
carrying roller width	360 mm	360 mm
load	500 kg	700 kg
height adjustment	650 - 950 mm	650 - 950 mm
dimensions (L x D x H)	1.000 x 440 x 650 - 950 mm	2.000 x 440 x 650 - 950 mm
weight	30 kg	58 kg
EAN	**4260364292978**	**4260364292985**
Item No.	**231 2004**	**231 2007**

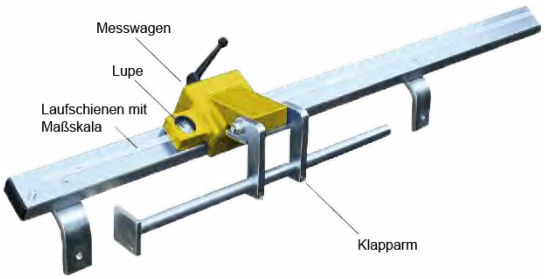

Our stop and measuring system servers as a simple supplement to a wide range of roller conveyors.
The system consists of a very stable running rail (60 x 30 x 3 mm), which is screwed to a roller conveyor of suitable length. Mounting brackets are included in the scope of delivery.
The rail is connected to an easy-running, ball-bearing mounted measuring carriage, which is also equipped with a ball-bearing mounted folding arm.
The complete system is extremely robust and designed for a long service life in rough workshop conditions.

Description	MAS 2.000	MAS 3.000	MAS 4.000	MAS 5.700
rail	2.280 mm	3.280 mm	4.280 mm	6.000 mm
fixing brackets	3	4	5	7
measuring length	2.000 mm	3.000 mm	4.000 mm	5.700 mm
EAN	**4260364297812**	**4260364297829**	**4260364297836**	**4260364297843**
Item No.	**531 0080**	**531 0120**	**531 0160**	**531 0240**

Self-sealing magnetic tape measure with scanning head and 1-axis digital readout system is optionally available instead of steel tape measure and reading optics.

AR 3.000

ROLLER STAND WITH DRIVE AND MEASURING SYSTEM

NEW

PREMIUM-LINE

Descriptions	AR 3.000
dimensions (L x D x H)	3.719 x 885 x 1.670 mm
weight	
EAN	**4260364298468**
Item No.	**531 0030**

AR 3.000

Automatic roller stand with servo drive, integrated length measuring system and automatic positioning. Feed path and number of steps programmable.
Touch-screen control with colour display.

BR 3.000 / BR 4.500 / BR 6.000

ROLLER STANDS FOR ALUMINUM CIRCULAR SAWING MACHINES

Description	BR 3.000	BR 4.500	BR 6.000
material support length	2.750 mm	4.250 mm	5.750 mm
feed	134 mm/sec	134 mm/sec	134 mm/sec
dimensions (L x D x H)	2.980 x 640 x 1.200 mm	4.500 x 640 x 1.200 mm	5.980 x 640 x 1.200mm
weight	120 kg	160 kg	210 kg
EAN	**4260364298475**	**4260364298482**	**4260364298499**
Item No.	**531 4030**	**531 4045**	**531 4060**

UNIVERSAL COOLING DEVICE

UNIVERSAL COOLANT DEVICE
BACKFITTING PUMP FOR SELF-INSTALLATION

» pump with tank
» flexible coolant hose made of plastic
» cut off cock
» assembly small components

Description	Coolant Device	Coolant Device
tank capacity	10 l	10 l
pumping capacity	12 l/min	12 l/min
voltage	230 V / 50 Hz	400 V / 50 Hz
dimensions (L x D x H)	360 x 250 x 300 mm	360 x 250 x 300 mm
weight	7 kg	7 kg
EAN	**On request**	**4260364292992**
Item No.	**On request**	**535 3040**

MICRO SPRAYING DEVICE

This unit requires a compressed air supply, 4 - 6 bar. The compressed air supply is not included in the scope of delivery. Coolant concentrate on request.

MICRO SPRAYING DEVICE
BACKFITTING SET FOR SELF-INSTALLATION
» shut-off choke (stepless adjustable)
» flexible plastig coolant hose
» PVC-air-hose (min. 2 bar required)
» easy construction

TECHNICAL DATA
» flow rate 0,1 - 30 ml/min
» fogging by compressed air
» spray area tapered 10° to 30° (depending on air pressure)

Description	Micro Spraying Device
spray power	0,1 - 30 ml/min
air connection	min. 2 bar
weight	0,4 kg
EAN	**4260364297102**
Item No.	**535 3050**

COOLING LIQUID

COOLANT EMULSION
5 / 20 LITER ORGANICALLY DEGRADABLE

» protects against rust
» organically degradable
» ratio of mixture 1:20
» tank content yields 100 l of coolant emulsion

Description	Coolant Emulsion	Coolant Emulsion
case content	5 ltr	20 ltr
dimensions (L x D x H)	180 x 140 x 250 mm	ca 290 x 259 x 386 mm
weight	5 kg	20 kg
EAN	**4260364293005**	**4260364291094**
Item No.	**580 1030**	**580 1031**

GEARBOX OIL AR 150

DIN 51517	Flashpoint 246 °C
CLP 150	Pourpoint -24 °C
Kin. Viskosity 40°C, 155 m/s	Viskosityindex 94

GEARBOX OIL AR 150

» universal industrial gear oil
» produced by high-quality base oils and modern sulphur-phosphor-additives
» protects against rust even in contact with salt water
» wear protection in the toughest conditions

Description	Gearbox oil AR 150
case contant	5 ltr
dimensions (L x D x H)	180 x 140 x 250 mm
weight	5 kg
EAN	**4260364297119**
Item No.	**580 1150**

MACHINE LIGHT (LED)

FIX

FIXED LED MACHINE LIGHT

» with magnetic stand or required stand plate
» integrated transformer
» 12 V LED bulb
» stable aluminium lighting head, dust- and water protected, oil-resistant

Description	Lamp (fixed)
voltage	230 V
illuminant	12 V
EAN	**4260364293012**
Item No.	**535 5030**

SAW BLADES FOR METAL CIRCULAR SAWS
GRINDING BELTS FOR BSM

SAW BLADES / GRINDING BELTS

MADE IN GERMANY

SAW BLADES FOR KKS

	Description	EAN	Item No.
steam treated saw blade	HSS saw blade, standard 315 x 2, 5 x 40 mm 200 Hz	4260364293586	530 0315
	HSS/ DMo5 saw blade, steam treatment, Standard 315 x 2,5 x 40 mm 200 HZ	4260364293593	530 0320
	HSS/ E - saw blade, steam treatment, Standard 315 x 2,5 x 40 mm 200 HZ	4260364293609	530 0325
	HSS/ DMo5 - saw blade, steam treatment, Standard 315 x 3,0 x 40 mm 200 HZ	4260364293616	530 0330
	HSS/ E - saw blade, steam treatment, Standard 315 x 3, 0 x 40 mm 200 Hz	4260364293623	530 0335

GRINDING BELTS FOR BSM **MINIMUM PURCHASE 5 PCS.**

	Description	EAN	Item No.
	grinding belt for TBSM 100-2 dim.: 100 x 1.220 mm K 40	4260364299717	525 1240
	grinding belt for TBSM 100-2 dim.: 100 x 1.220 mm K 80	4260364299724	525 1280
	grinding belt for KRBS 100 dim.: 100 x 2.000 mm K 100	4260364293715	525 5100
	grinding belt for KRBS 100 dim.: 100 x 2.000 mm K 80	4260364293722	525 5080
	grinding belt for KRBS 100 dim.: 100 x 2.000 mm K 60	4260364293739	525 5060
	grinding belt for KRBS 100 dim.: 100 x 2.000 mm K 40	4260364293746	525 5040
	grinding belt for BSM 75 dim.: 75 x 2.000 mm K 100	4260364293678	525 1100
	grinding belt for BSM 75 dim.: 75 x 2.000 mm K 80	4260364293685	525 1080
	grinding belt for BSM 75 dim.: 75 x 2.000 mm K 60	4260364293692	525 1060
	grinding belt for BSM 75 dim.: 75 x 2.000 mm K 40	4260364293708	525 1040
	grinding belt for BSM 150 dim.: 150 x 2.000 mm K 100	4260364293630	525 2100
	grinding belt for BSM 150 dim.: 150 x 2.000 mm K 80	4260364293647	525 2080
	grinding belt for BSM 150 dim.: 150 x 2.000 mm K 60	4260364293654	525 2060
	grinding belt for BSM 150 dim.: 150 x 2.000 mm K 40	4260364293661	525 2040
	grinding belt for BSM 220 dim.: 220 x 2.000 mm K 100	On request	On request

PROMOTION ITEMS

	Description	EM-Cap	EM-Clock
	EAN	4260364293753	4260364293760
	Item No.	999 1001	999 1002

DIGITAL MEASURING SYSTEM

PROFESSIONAL EQUIPMENT FOR INDUSTRIAL USE AT SMALL PRICE

PREMIUM-LINE

PIC.: MONITOR WITH LED DISPLAY

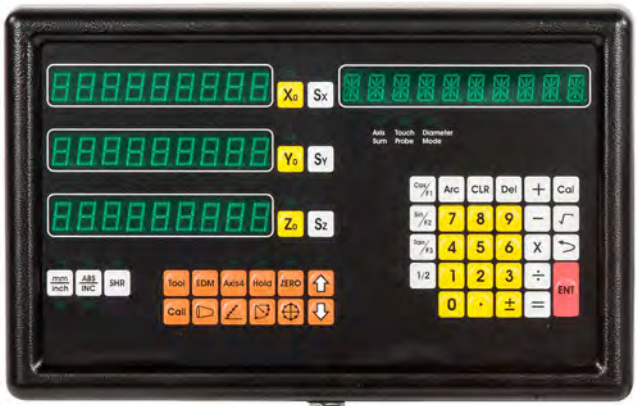

PIC.: STANDARD MONITOR (3-AXIS)

With the high-quality PREMIUM-LINE digital measuring system the handling of conventional machine tools becomes faster, safer and significantly easier. PREMIUM-LINE digital measuring systems are applicable for milling machines, lathes, drilling machines, machines for sheet metal workings, special machines etc. that are equipped with straight-line movements and everywhere where straight-line movements have to be measured e.g. feed devices.

New model with LCD color display, for 2 - 4 measuring rulers, including angle measurement, 7 languages possible: German, English, French, Dutch, Spanish, Portuguese and Turkish

Description	EAN	Item No.
Indicator for one axis	**4260364295658**	**610 0001**
Indicator for one axis without keyboard	**4260364299731**	**610 1001**
Indicator for two axis	**4260364295474**	**610 0002**
Indicator for three or 2 + 1 (e.g. Turning machine) axis	**4260364295481**	**610 0003**
Indicator for four or 3 + 1 (e.g. Drilling machine) axis	**4260364295498**	**610 0004**
EM PREMIUM-LINE for 1-4-axis	**4260364297126**	**611 0001**

Easy to install magnetic measuring tapes on aluminum strip in different measuring lengths with 3.5 m metal coveredcable to display device incl. assembled connector.

Description	EAN	Item No.
aluminium moulding incl. magnetic tape and reading head 500 mm	**4260364297249**	**610 3050**
aluminium moulding incl. magnetic tape and reading head 1.000 mm	**4260364297256**	**610 3100**
aluminium moulding incl. magnetic tape and reading head 2.000 mm	**4260364297263**	**610 3200**

LINEAR MEASURING SYSTEM

PREMIUM-LINE

PIC.: CAPSULED MEASURING ROD WITH CONNECTION CABLE, PLUG AND METAL SPIRAL SHEATING

Open low-cost systems for simple applications on request.

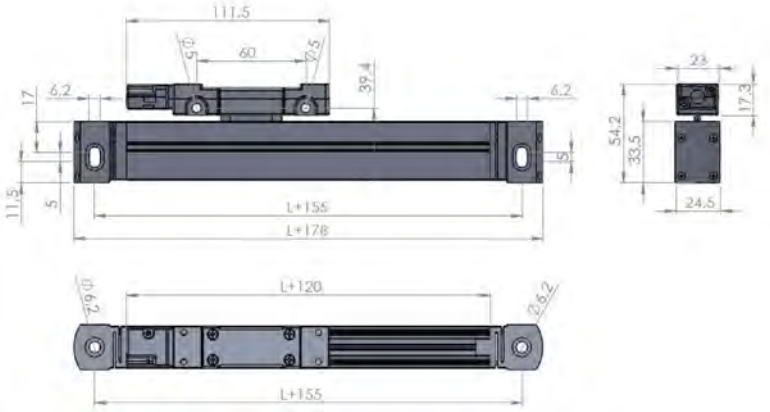

Rulers	EAN	Item No.
EM ruler 100 mm	**4260364297164**	**610 1010**
EM ruler 150 mm	**4260364297171**	**610 1015**
EM ruler 200 mm	**4260364297188**	**610 1020**
EM ruler 250 mm	**4260364297195**	**610 1025**
EM ruler 300 mm	**4260364297201**	**610 1030**
EM ruler 400 mm	**4260364295511**	**610 1040**
EM ruler 500 mm	**4260364295528**	**610 1050**
EM ruler 600 mm	**4260364295535**	**610 1060**
EM ruler 700 mm	**4260364295542**	**610 1070**
EM ruler 800 mm	**4260364295559**	**610 1080**
EM ruler 900 mm	**4260364295566**	**610 1090**
EM ruler 1.000 mm	**4260364295573**	**610 1100**
EM ruler 1.200 mm	**4260364295580**	**610 1120**
EM ruler 1.350 mm	**4260364295597**	**610 1135**
EM ruler 1.500 mm	**4260364295603**	**610 1150**
EM ruler 1.750 mm	**4260364295610**	**610 1175**
EM ruler 2.000 mm	**4260364295627**	**610 1200**
EM ruler 2.500 mm	**4260364295634**	**610 1250**
EM ruler 3.000 mm	**4260364295641**	**610 1300**

We recommend capsuled mini measuring rods for narrow installation possibilities or small machines.

Description	EAN	Item No.
EM Mini-ruler 50 mm	**4260364297133**	**610 2005**
EM Mini-ruler 100 mm	**4260364297140**	**610 2010**
EM Mini-ruler 150 mm	**4260364297157**	**610 2015**

Our measuring rods are always supplied with the connection cable fitted.

SPECIAL SALE

2ND CHOICE MACHINES, MACHINES WITH TRANSPORT DAMAGES, SAMPLE MACHINES, USED MACHINES

As special sale we offer 2nd choice machines, machines with transport damages, samplemachines and used machines.

The machines of the special sale are tested for function exactly like regular catalogue goods. Refurbishment of purely optical points is not planned, but is taken into account in price reduction.
Due to additions and disposals the stock of the special sale changes almost daily, we recommend to ask for the current status in case of a concrete interest.
In our special sale you will find machines as good as new which are not listed in our catalogue, e.g. sample machines from exhibitions and fairs. These machines have partial paint damages or other minimal optical defects e.g. by transport.

There are also machines with traces of use, e.g demonstration machines leasing returns, etc.

Visit our special sale on our homepage under: http://www.epple.com/aktionen/sonderverkauf.html

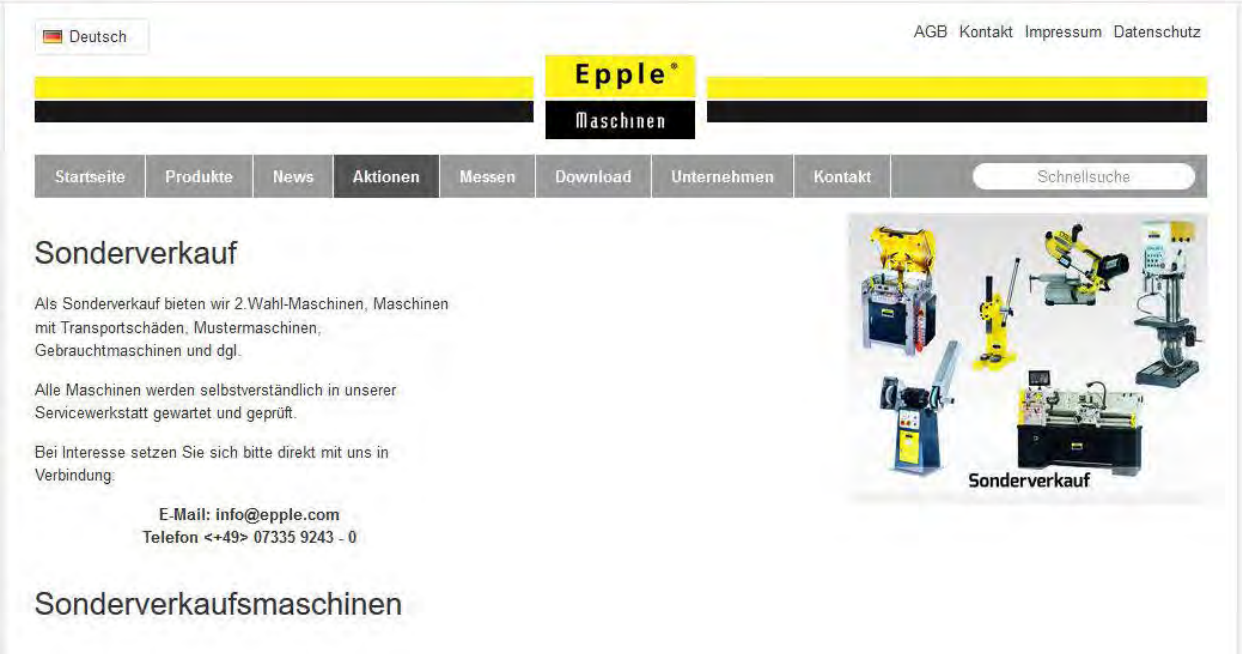

General note

With publication of this catalog, all previous catalogs and price lists become invalid. All prices are without engagement, in EUR plus packaging costs (1% of the net value), freight costs, unloading charges, installation costs and possibly instruction costs as well as the legal VAT. We reserve the right to make technical changes in the course of further development and optical product changes. The pictures of the machines are partly with optional accessories. For printing errors, mistakes, incorrect presentation or faulty technical information, no responsibility is accepted. Some machines and equipment are partly dismantlede for transport-technical reasons and are delivered without oil filling. Auxiliaries and resources such as for example lubricant, hydraulic fluids and coolants are not included with the shipment. The sale of our machines takes place via the specialized trade. The delivery takes place exclusively to our delivery and payment conditions. Our general terms and conditions apply, which can be viewed under www.epple.com or will be sent on request. The goods remain our property until full payment. In the case of resale to third persons, our reservation of property rights remains in effect until full payment of the goods. In the commercial sector the legal guarantee conditions apply. This catalog is copyrighted; reproduction and reprint, no matter in what way, require our written permission. For the protection of our goods, we register brand, patent and design rights, if this is possible in individual cases.

The specifications for the precision of the products can be found in the technical data on the catalog pages. If no data can be found here, please contact us. The specified precisions are achieved under standard conditions (proper installation of the machines and ambient temperatures of 20 ° C). Machines which are not titled PREMIUM or HIGHLINE are assigned tot he standard program. Machines of the standard program are not designed for continuous operation as they are subject to a special price / performance level. All machines have to be operated basically only by suitable and instructed personnel.

Electrically operated machines must be connected by an electrician or an electrically qualified person. Machines with frequency inverters or inverted rectifiers should not be operated via connection plugs, but should be connected directly tot he power supply system of the building electrics. In the presence of earth leakage circuit breakers in the building electrical system, type B all-current-sensitive earth leakage circuit breakers are recommended. Alternating current-sensitive earth leakage circuit breakers of the type AC (alternating current only) are not suitable for frequency converters.

© Epple Maschinen GmbH, 73349 Wiesensteig, Germany

LEASING IS SIMPLE

Already from € 2.000,- Epple Maschinen® can be financed by leasing.

Advantages of leasing:

- **Liquidity**
  You **save** your equity, your liquid funds and the credit line at your house bank. In contrast to the purchase, leasing does not lead to an immediate debit of liquidity at the time of investment.
- **Fixed constant costs**
  The leasing down payments are fixed and therefore offer you a **secure calculation basis**.
- **Cost expenditure**
  Leasing fulfils the "pay-us-you-earn" condition; if the machine is used appropriately, it pays for itself through monthly income.
- **Balancing**
  Leasing is **balance sheet neutral**, i.e. your balance sheet ratios do not change.
- **Taxes**
  There are no investment-related taxes.
- **Utilisation**
  You have **unrestricted right to use** the machine.
- Warranty services remain fully valid.

Your personal leasing offer is available on request.

SELECTING THE RIGHT SAW BANDS

SPECIAL SAW BANDS FOR OUR METAL BAND SAWS

TOOTH PITCH

variable tooth division	engagement length (mm)	
ZpZ	from	up to
10-14		30
8-12	20	50
6-10	25	60
5-8	35	80
4-6	50	100
4-5	70	120
3-4	80	150
2-3	120	350
1,4-2	250	600
1,0-1,4	400	1000
0,75-1,25	700	1400
0,7-1,0	900	3000

constant tooth division	engagement length (mm)	
ZpZ	from	up to
14		15
10	15	30
8	30	50
6	50	80
4	80	120
3	120	200

You may choose between constant and variable tooth pitch. Here the contact length of the blade in the work piece is decisive. Both tables left handed show the limit values.

Low-vibration and low noise sawing due to variable toothing. Because of variable toothing, larger material cross section are optimal covered.

Example: saw blade with variable tooth pitch

Example: saw blade with constant tooth pitch

SAWING TUBES AND PROFILES

S	external pipe diameter (mm) / tooth division Tz in ZpZ								
mm	**20**	**40**	**60**	**80**	**100**	**120**	**150**	**200**	**300**
2	14	14	14	14	14	14	10-14	10-14	8-12
3	14	14	10-14	10-14	10-14	10-14	8-12	8-12	6-10
4	14	14	10-14	10-14	8-12	8-12	8-12	8-12	5-8
5	14	10-14	10-14	10-14	8-12	8-12	8-12	6-10	5-8
6	14	10-14	10-14	8-12	8-12	8-12	8-12	5-8	5-8
8	14	10-14	8-12	8-12	8-12	6-10	6-10	5-8	4-6
10		8-12	6-10	6-10	6-10	5-8	5-8	4-6	4-6
12		8-12	6-10	6-10	5-8	5-8	4-6	4-6	4-6
15		8-12	6-10	5-8	5-8	4-6	4-6	4-6	3-4
20				5-8	4-6	4-6	4-6	3-4	3-4
30				4-6	4-6	4-6	3-4	3-4	3-4
50						3-4	3-4	3-4	2-3
75								2-3	2-3
100									2-3

BI-METALL COMBI

SAW BANDS

MADE IN GERMANY

Description	Dimensions	EAN	Item No.
for BS 125 GS	1.440 x 13 x 0,65 mm 14 ZpZ Bi-Metall	**4260364293814**	**533 1250**
for BS 125 GS	1.440 x 13 x 0,65 mm 6-10 ZpZ Bi-Metall	**4260364293821**	**533 1245**
for BS 125 GS	1.440 x 13 x 0,65 mm 8-12 ZpZ Bi-Metall	**4260364293838**	**531 1250**
for BS 125 GS	1.440 x 13 x 0,65 mm 10-14 ZpZ Bi-Metall	**4260364293845**	**532 1250**
for BS 128 DG	1.638 x 13 x 0,65 mm 14 ZpZ Bi-Metall	**4260364293852**	**532 2814**
for BS 128 DG	1.638 x 13 x 0,65 mm 10-14 ZpZ Bi-Metall	**4260364293869**	**533 2810**
for BS 151 GS - old length	1.735 x 13 x 0,9 mm 14 ZpZ Bi-Metall	**4260364293876**	**532 1514**
for BS 151 GS - old length	1.735 x 13 x 0,9 mm 4 ZpZ Bi-Metall	**4260364293883**	**533 1445**
for BS 151 GS - new length	1.785 x 13 x 0,9 mm 4 ZpZ Bi-Metall	**4260364293937**	**536 1503**
for BS 151 GS - old length	1.735 x 13 x 0,9 mm 6 ZpZ Bi-Metall	**4260364293890**	**533 1450**
for BS 151 GS - new length	1.785 x 13 x 0,9 mm 6 ZpZ Bi-Metall	**4260364293968**	**536 1506**
for BS 151 GS - new length	1.785 x 13 x 0,9 mm 8-12 ZpZ Bi-Metall	**4260364294088**	**536 1508**
for BS 151 GS - old length	1.735 x 13 x 0,9 mm 10-14 ZpZ Bi-Metall	**4260364293920**	**533 1510**
for BS 151 GS - new length	1.785 x 13 x 0,9 mm 10-14 ZpZ Bi-Metall	**4260364294170**	**536 1514**
for BS 180 / BS 180 G	2.360 x 20 x 0,9 mm 8-12 ZpZ Bi-Metall	**4260364293944**	**533 1812**
for BS 180 / BS 180 G	2.360 x 20 x 0,9 mm 10-14 ZpZ Bi-Metall	**4260364293951**	**533 1810**
for BS 210 - old length	2.085 x 20 x 0,9 mm 4 ZpZ Bi-Metall	**4260364293975**	**533 1910**
for BS 210 - old length	2.085 x 20 x 0,9 mm 4-6 ZpZ Bi-Metall	**4260364293982**	**533 1920**
for BS 210 - new length	2.110 x 20 x 0,9 mm 4-6 ZpZ Bi-Metall	**4260364294217**	**536 1906**
for BS 210 - old length	2.085 x 20 x 0,9 mm 6-10 ZpZ Bi-Metall	**4260364293999**	**533 1930**
for BS 210 - new length	2.110 x 20 x 0,9 mm 6-10 ZpZ Bi-Metall	**4260364297270**	**536 1930**
for BS 210 - old length	2.085 x 20 x 0,9 mm 8-12 ZpZ Bi-Metall	**4260364294002**	**532 1710**
for BS 210 - new length	2.110 x 20 x 0,9 mm 8-12 ZpZ Bi-Metall	**4260364297287**	**536 1710**
for BS 210 - old length	2.085 x 20 x 0,9 mm 10-14 ZpZ Bi-Metall	**4260364294019**	**533 1715**
for BS 210 - new length	2.110 x 20 x 0,9 mm 10-14 ZpZ Bi-Metall	**4260364297294**	**536 1715**
for BS 230 V	3.035 x 27 x 0,9 mm 4-6 ZpZ Bi-Metall	**4260364294033**	**533 2304**
for BS 230 V	3.035 x 27 x 0,9 mm 5-8 ZpZ Bi-Metall	**4260364297317**	**533 2305**
for BS 230 V	3.035 x 27 x 0,9 mm 6-10 ZpZ Bi-Metall	**4260364297324**	**533 2306**
for BS 230 V	3.035 x 27 x 0,9 mm 8-12 ZpZ Bi-Metall	**4260364294026**	**533 2308**
for BS 230 V	3.035 x 27 x 0,9 mm 10-14 ZpZ Bi-Metall	**4260364294040**	**533 2310**
for BS 230 VG	3.230 x 27 x 0,9 mm 6-10 ZpZ Bi-Metall	**4260364294057**	**531 2310**
for BS 230 VG	3.230 x 27 x 0,9 mm 8-12 ZpZ Bi-Metall	**4260364294064**	**532 2310**
for BS 230 VG	3.230 x 27 x 0,9 mm 10-14 ZpZ Bi-Metall	**4260364294071**	**533 2300**
for BS 275 / BS 280	2.480 x 27 x 0,9 mm 4-6 ZpZ Bi-Metall	**4260364294095**	**533 2730**
for BS 275 / BS 280	2.480 x 27 x 0,9 mm 5-8 ZpZ Bi-Metall	**4260364294101**	**533 2758**
for BS 275 / BS 280	2.480 x 27 x 0,9 mm 6-10 ZpZ Bi-Metall	**4260364294118**	**533 2740**
for BS 275 / BS 280	2.480 x 27 x 0,9 mm 8-12 ZpZ Bi-Metall	**4260364294125**	**531 2708**
for BS 275 / BS 280	2.480 x 27 x 0,9 mm 10-14 ZpZ Bi-Metall	**4260364294132**	**533 2710**
for BS 279 G / GF	2.460 x 27 x 0,9 mm 8-12 ZpZ Bi-Metall	**4260364294156**	**532 2610**
for BS 279 G / GF	2.460 x 27 x 0,9 mm 10-14 ZpZ Bi-Metall	**4260364294163**	**533 2615**
for BS 350 DG / DGH / DGHF	2.925 x 27 x 0,9 mm 2-3 ZpZ Bi-Metall	**4260364294224**	**533 3500**
for BS 350 DG / DGH / DGHF	2.925 x 27 x 0,9 mm 3-4 ZpZ Bi-Metall	**4260364294231**	**533 3502**
for BS 350 DG / DGH / DGHF	2.925 x 27 x 0,9 mm 4-6 ZpZ Bi-Metall	**4260364294248**	**533 3504**
for BS 350 DG / DGH / DGHF	2.925 x 27 x 0,9 mm 6-10 ZpZ Bi-Metall	**4260364294255**	**531 3504**
for BS 350 DG / DGH / DGHF	2.925 x 27 x 0,9 mm 8-12 ZpZ Bi-Metall	**4260364294262**	**533 3512**
for E-BS 230 DG / DGH / V	2.730 x 27 x 0,9 mm 4-6 ZpZ Bi-Metall	**4260364295351**	**632 3006**
for E-BS 230 DG / DGH / V	2.730 x 27 x 0,9 mm 6-10 ZpZ Bi-Metall	**4260364295368**	**632 3010**
for E-BS 230 DG / DGH / V	2.730 x 27 x 0,9 mm 10-14 ZpZ Bi-Metall	**4260364295375**	**632 3014**
for E-BS 270 DG / DGH	3.160 x 27 x 0,9 mm 4-6 ZpZ Bi-Metall	**4260364295382**	**632 7006**
for E-BS 270 DG / DGH	3.160 x 27 x 0,9 mm 6-10 ZpZ Bi-Metall	**4260364295399**	**632 7010**
for E-BS 270 DG / DGH	3.160 x 27 x 0,9 mm 10-14 ZpZ Bi-Metall	**4260364295405**	**633 7014**

MINIMUM PURCHASE 3 PCS.

MORE SAW BANDS ON REQUEST.

PRODUCTS ARE PRODUCED IN ACCORDANCE WITH THE RELEVANT CE STANDARDS
QUALITY PRODUCT RECOMMENDED RETAIL PRICE

BI-METALL COMBI

SAW BANDS

Description	Dimensions	EAN	Item No.
for E-BS 320 / H / V / GV	3.660 x 27 x 0,9 mm 4-6 ZpZ Bi-Metall	**4260364294873**	**632 2006**
for E-BS 320 / H / V / GV	3.660 x 27 x 0,9 mm 5-8 ZpZ Bi-Metall	**4260364294880**	**632 2008**
for E-BS 320 / H / V / GV	3.660 x 27 x 0,9 mm 6-10 ZpZ Bi-Metall	**4260364294897**	**632 2010**
for E-BS 320 / H / V / GV	3.660 x 27 x 0,9 mm 10-14 ZpZ Bi-Metall	**4260364294903**	**632 2014**
for E-BS 320 L / HL / VL / GVL	4.160 x 34 x 1,1 mm 4-6 ZpZ Bi-Metall	**4260364294958**	**632 2106**
for E-BS 320 L / HL / VL / GVL	4.160 x 34 x 1,1 mm 5-8 ZpZ Bi-Metall	**4260364294965**	**632 2108**
for E-BS 320 L / HL / VL / GVL	4.160 x 34 x 1,1 mm 6-10 ZpZ Bi-Metall	**4260364294972**	**632 2110**
for E-BS 325 GV / GH	4.380 x 34 x 1,1 mm 4-6 ZpZ Bi-Metall	**4260364294910**	**633 2006**
for E-BS 325 GV / GH	4.380 x 34 x 1,1 mm 5-8 ZpZ Bi-Metall	**4260364294927**	**633 2008**
for E-BS 325 GV / GH	4.380 x 34 x 1,1 mm 6-10 ZpZ Bi-Metall	**4260364294934**	**633 2010**
for E-BS 360 DGH ECO	4.800 x 34 x 1,1 mm 4-6 ZpZ Bi-Metall	**4260364294996**	**633 2106**
for E-BS 360 DGH ECO	4.800 x 34 x 1,1 mm 5-8 ZpZ Bi-Metall	**4260364295002**	**633 2108**
for E-BS 360 DGH ECO	4.800 x 34 x 1,1 mm 6-10 ZpZ Bi-Metall	**4260364295019**	**633 2110**
for E-BS 360 DGH	5.000 x 34 x 1,1 mm 4-6 ZpZ Bi-Metall	**4260364295033**	**632 2306**
for E-BS 360 DGH	5.000 x 34 x 1,1 mm 5-8 ZpZ Bi-Metall	**4260364295040**	**632 2308**
for E-BS 360 DGH	5.000 x 34 x 1,1 mm 6-10 ZpZ Bi-Metall	**4260364295057**	**632 2310**
for E-BS 440 DGH / V / E-BS 360 GV	5.200 x 34 x 1,1 mm 4-6 ZpZ Bi-Metall	**4260364295118**	**632 2406**
for E-BS 440 DGH / V / E-BS 360 GV	5.200 x 34 x 1,1 mm 5-8 ZpZ Bi-Metall	**4260364295125**	**632 2408**
for E-BS 440 DGH / V / E-BS 360 GV	5.200 x 34 x 1,1 mm 6-10 ZpZ Bi-Metall	**4260364295132**	**632 2410**
for E-BSP 440 DGH	5.200 x 41 x 1,3 mm 4-6 ZpZ Bi-Metall	**4260364295194**	**632 3406**
for E-BSP 440 DGH	5.200 x 41 x 1,3 mm 5-8 ZpZ Bi-Metall	**4260364295200**	**632 3408**
for E-BSP 440 DGH	5.200 x 41 x 1,3 mm 6-10 ZpZ Bi-Metall	**4260364295217**	**632 3410**
for E-BSP 440 GV	5.400 x 41 x 1,3 mm 4-6 ZpZ Bi-Metall	**4260364295071**	**633 2306**
for E-BSP 440 GV	5.400 x 41 x 1,3 mm 5-8 ZpZ Bi-Metall	**4260364295088**	**633 2308**
for E-BSP 440 GV	5.400 x 41 x 1,3 mm 6-10 ZpZ Bi-Metall	**4260364295095**	**633 2310**
for E-BSP 540 GH	6.000 x 41 x 1,3 mm 4-6 ZpZ Bi-Metall	**4260364295412**	**632 4006**
for E-BSP 540 GH	6.000 x 41 x 1,3 mm 6-10 ZpZ Bi-Metall	**4260364295429**	**632 4010**
for E-BSP 560 DGH	6.800 x 41 x 1,3 mm 4-6 ZpZ Bi-Metall	**4260364295443**	**632 6006**
for E-BSP 560 DGH	6.800 x 41 x 1,3 mm 6-10 ZpZ Bi-Metall	**4260364295450**	**632 6010**
for E-BS 810 GH	8.200 x 41 x 1,3 mm 4-6 ZpZ Bi-Metall	**4260364295156**	**633 2406**
for E-BS 810 GH	8.200 x 41 x 1,3 mm 2-3 ZpZ Bi-Metall	**4260364295163**	**633 2403**
for E-BS 810 GH	8.200 x 41 x 1,3 mm 3-4 ZpZ Bi-Metall	**4260364295170**	**633 2404**
for E-BS 810 GH	8.200 x 41 x 1,3 mm 4-5 ZpZ Bi-Metall	**4260364295187**	**633 2405**
for E-BS 820 V	8.200 x 54 x 1,6 mm 4-6 ZpZ Bi-Metall	**4260364295231**	**633 3406**
for E-BS 820 V	8.200 x 54 x 1,6 mm 2-3 ZpZ Bi-Metall	**4260364295245**	**633 3403**
for E-BS 820 V	8.200 x 54 x 1,6 mm 3-4 ZpZ Bi-Metall	**4260364295252**	**633 3404**
for E-BS 820 V	8.200 x 54 x 1,6 mm 4-5 ZpZ Bi-Metall	**4260364295269**	**633 3405**
for E-BSP 650 DGH NC	8.400 x 54 x 1,6 mm 2-3 ZpZ Bi-Metall	**4260364295276**	**632 5603**
for E-BSP 650 DGH NC	8.400 x 54 x 1,6 mm 3-4 ZpZ Bi-Metall	**4260364295283**	**632 5604**
for E-BSP 650 DGH NC	8.400 x 54 x 1,6 mm 4-6 ZpZ Bi-Metall	**4260364295290**	**632 5606**
for E-BS 1.020 H	9.500 x 54 x 1,6 mm 4-6 ZpZ Bi-Metall	**4260364295313**	**633 5606**
for E-BS 1.020 H	9.500 x 54 x 1,6 mm 2-3 ZpZ Bi-Metall	**4260364295320**	**633 5603**
for E-BS 1.020 H	9.500 x 54 x 1,6 mm 3-4 ZpZ Bi-Metall	**4260364295337**	**633 5604**
for E-BS 1.020 H	9.500 x 54 x 1,6 mm 4-5 ZpZ Bi-Metall	**4260364295344**	**633 5605**
for E-BS 1.110 H	10.500 x 67 x 1,6 mm 1,5-2 ZpZ Bi-Metall	**4260364297263**	**633 2202**
for E-BS 1.110 H	10.500 x 67 x 1,6 mm 2-3 ZpZ Bi-Metall	**4260364297270**	**633 2203**
for E-BS 1.110 H	10.500 x 67 x 1,6 mm 3-4 ZpZ Bi-Metall	**4260364297287**	**633 2204**
for E-BS 1.110 HL	10.900 x 67 x 1,6 mm 1,5-2 ZpZ Bi-Metall	**4260364297300**	**633 3502**
for E-BS 1.110 HL	10.900 x 67 x 1,6 mm 2-3 ZpZ Bi-Metall	**4260364297317**	**633 3503**
for E-BS 1.110 HL	10.900 x 67 x 1,6 mm 3-4 ZpZ Bi-Metall	**4260364297324**	**633 3504**
for E-BS 1.313 H	12.100 x 67 x 1,6 mm 1,5-2 ZpZ Bi-Metall	**4260364297348**	**633 6502**
for E-BS 1.313 H	12.100 x 67 x 1,6 mm 2-3 ZpZ Bi-Metall	**4260364297355**	**633 6503**
for E-BS 1.313 H	12.100 x 67 x 1,6 mm 3-4 ZpZ Bi-Metall	**4260364297362**	**633 6504**
for E-BS 1.515 H	13.300 x 80 x 1,6 mm 2-3 ZpZ Bi-Metall	**4260364297294**	**633 6603**
for E-BS 1.515 H	13.300 x 80 x 1,6 mm 1,5-2 ZpZ Bi-Metall	**4260364297331**	**633 6602**
for E-BS 1.515 H	13.300 x 80 x 1,6 mm 1,1-1,6 ZpZ Bi-Metall	**4260364297379**	**633 6601**

MINIMUM PURCHASE 3 PCS.

MORE SAW BANDS ON REQUEST.

INDEX

Aluminum Circular Saw 122 - 126
Angle Bender 142
Angle Machine Vice 265
Arbor Presses 236
Automatic Circular Saw 120 - 121

Band Saws 74 - 120
Bed-Type Milling Machines 54 - 56
Belt Grinder 131 - 133
Bending Machines 142 - 145
Bending Machines 156 - 191
Bending Machine With Goutweed 157

Circular Saw 118 - 126
Circular Shear 213 - 214
Clamp Kit 271
Cold Circular Saw 118 - 119
Collet Chucks 272
Column Drilling Machine 18 - 29
Coolant Device 281
Coolant Liquid 282
Crimping Machine 146 - 151
Cross Tables 266
Cutting Machine 127

Digital Readout System 284 - 285
Drill Set 268
Drilling Machines 17 - 45
Drilling-Milling Machines 36 - 45
Double Belt Grinders 138 - 139
Double Ended Grinders 130

Equipment 259 - 290
Extension Sleeves 270

Flanging Machine 154
Flat and Surface Grinding Machine 137
Flow Hole Moulding Process 182 - 191
Folding Machines 152
Four-Roller-Round-Bending Machines 182 - 191

Geared Drilling Machine 30 - 33
Geared Drilling-Milling Machines 38 - 45
Grinding Equipment 286
Grinding Machines 130 - 140
Grinding Machine with Frequency Converter 131
Guillotine Shears 216 - 222

Hand Lever Shears 215
Heavy Duty Center Lathe Machines 66 - 72
HM-Turning Plates 276
HSS-Milling Cutters 272
Hydraulic Bending Press 241
Hydraulic Hole Punching Machine 234 - 235
Hydraulic Pipe Bending Machine 143
Hydraulic Press 238 - 240
Hydraulic Steel Workers 228 - 233
Hydraulic Workshop Press 242 - 251

Jaw Chucks 274 - 275

Laser Cutting System 226 - 227
Lathe Machines 58 - 72
Leasing 287
Lever Shears 215 - 217
Life Center 270
Linear Measuring Systems 285

Machine Feet 278
Magnetic Bending Machines 160 - 161
Magnetic Clamping Plates 267
Mandrel Bending Machines 145
Metal Band Saw 74 - 117
Metal Belt Grinder 132 - 133
Metal Circular Saw 119
Micro Spraying Device 281
Milling Machines 46 - 56
Milling Vices 264
Morse Tapers 270
Morse Taper Drill Case 268
Multifix 273

Notching Machines 210 - 212

Plasma Cutting System 223 - 225
Pneumatic Rebate Pressing Machine 153
Precision Parallels 271
Precision Geared Lathe Machines 62 - 63
Press Brake 252 - 254
Profile Roller Machines 192 - 208

Quick Action Drill Chuck 268
Quick Change Tool 273

Radial Drilling Machine 34
Reducing Sleeves 270
Roller Blocks 278
Roller-Round-Bending Machines 166 - 191
Roller Stands 279 - 280
Rotary Tables 266
Round-Bending Machines 166 - 191

Saw Bands 288 - 290
Saw Blades 283
Sleeves 270
Stands 277
Surface Grinding Machines 140

Table Drilling Machine 17 / 20
Threading Attachements 268
Threading Machine 258
Three-Roller-Round-Bending Machine 166 - 181
Tube Grinder 134 - 136
Turning Plates 276
Turning Tools 276

Universal Milling Machine 44 - 56
Universal Precision Lathe Machines 64 - 65

Vertical Band Saw 128
Vices 260 - 265

Welding Positioner 256 - 257
Working Light 282
Workshop Presses 242 - 251

MACHINES FOR CRAFTSMEN AND INDUSTRY

METAL AND SHEET METAL WORKING MACHINES

LEASING IS EASY

Starting at 2.000,- EUR, Epple Machines® can be financed by leasing.
Your personal leasing offer is available on request.

YOUR RELIABLE PARTNER SINCE 43 YEARS

EPPLE MASCHINEN®

Epple Maschinen GmbH
Auf der Breite 2-14
D - 73349 Wiesensteig
Telefon: <+49> 07335 - 9243 - 0
Telefax: <+49> 07335 - 9243 - 300
E-Mail: info@epple.com

www.epple.com