DIAPHRAGM PUMPS

No. 405-PM

ADVANCED FLUID
MANAGEMENT SOLUTIONS

Ready for any challenge

HELP THE NATURE
Packaging contains, depending on the articles, one or more of the following materials; they must be recycled in accordance with current regulations in the country of use.
cardboard • polyethylene sack • polystyrene
paper • wood • nails • plastic strap
cellophane • clips • gummed paper

ADVANCED FLUID MANAGEMENT SOLUTIONS

DESIGN IS AN

Art

RAASM
founded in 1975

the human side of Quality

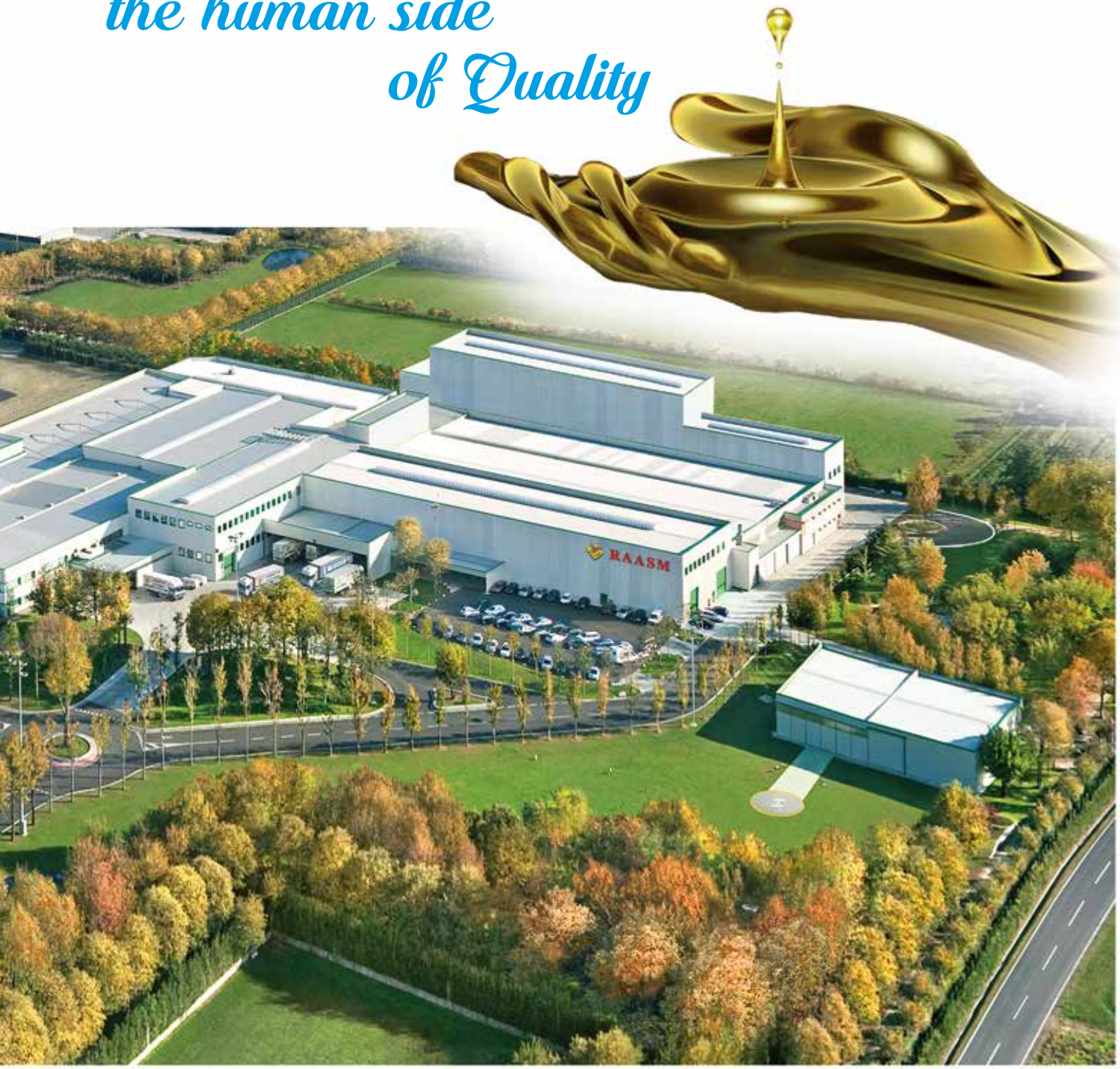

RAASM pneumatic double-diaphragm pumps are designed and manufactured for pumping a wide range of fluids even with high viscosities and with suspended solids.

In being ATEX certified, they can also be used for heavy applications such as in places with high humidity or with potentially explosive atmosphere.

Aluminum

INDEX

Series 120-AB	page	12
Series 1000-AB	page	12
Series 1000-AB with multi-ported inlet/outlet	page	13
Series 1140-AB	page	13
Series 1120-AB	page	14
Series 2000-AB	page	14
Series 2000-AB with multi-ported inlet/outlet	page	15
Series 2000-AB	page	15

- Self-priming capability
- Easy adjustment of delivery
- They do not become damaged in case of prolonged operation when empty

are some of the features that make these pumps particularly versatile and appreciated in all work environments. The wide range of materials used for the pumps makes it easy to identify the model having the best chemical compatibility with the fluid to be pumped and for the work environment.

Aluminum and Polypropylene

Polypropylene

Series 120-PPAB with multi-ported inlet/outlet	page	18
Series 120-PPAB dual inlet/multi-ported outlet	page	18
Series 1000-PPAB	page	19
Series 1000-PPAB dual inlet	page	19

Series 120-PPB with multi-ported inlet/outlet	page	22
Series 120-PPB dual inlet/multi-ported outlet	page	22
Series 1000-PPB	page	23
Series 1000-PPB dual inlet	page	23

ACCESSORIES	page	24

EXAMPLES OF **USE**

for pump entirely made of aluminum or aluminum and polypropylene

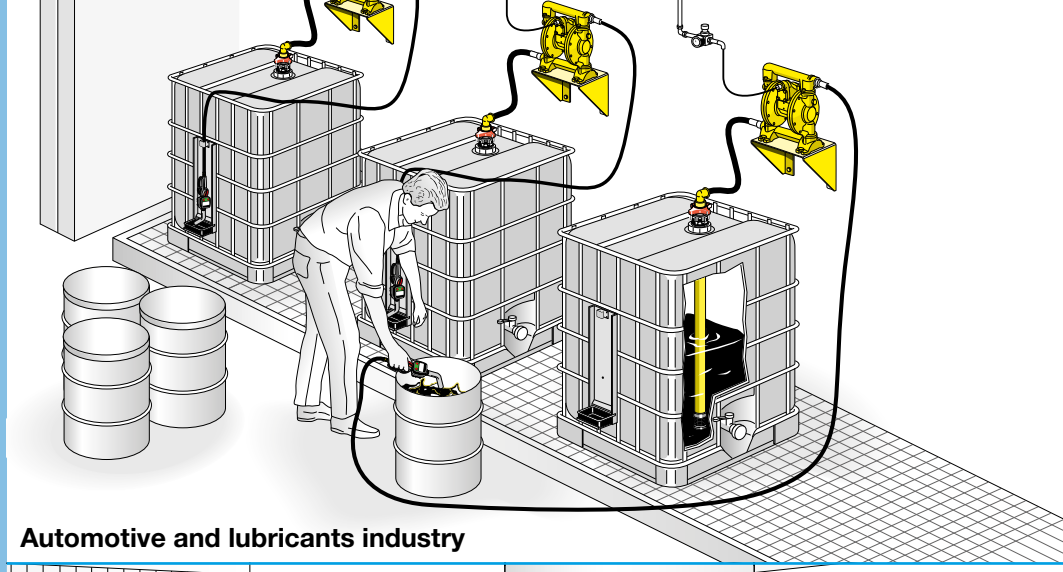

Automotive and lubricants industry

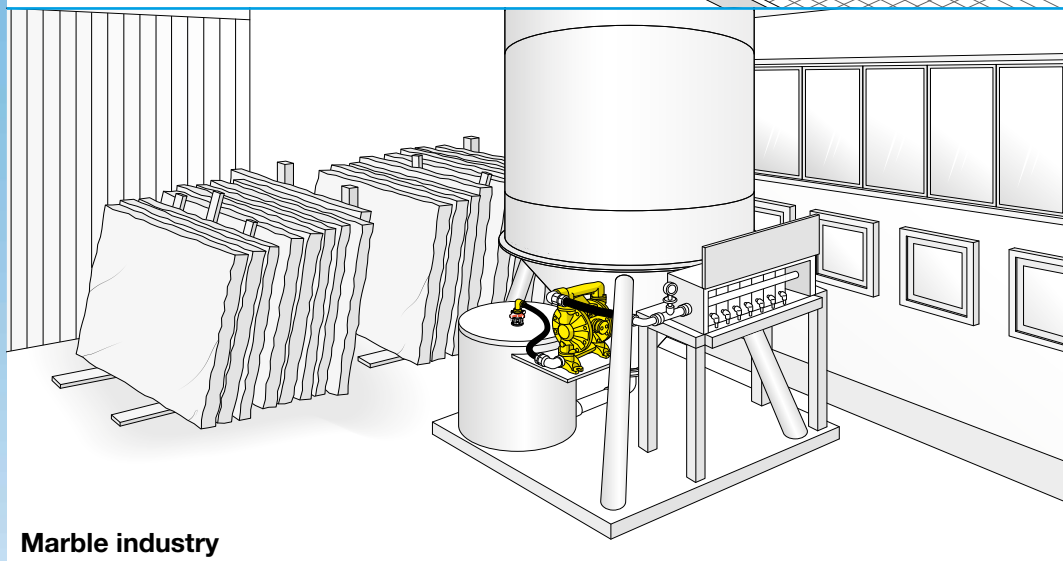

Marble industry

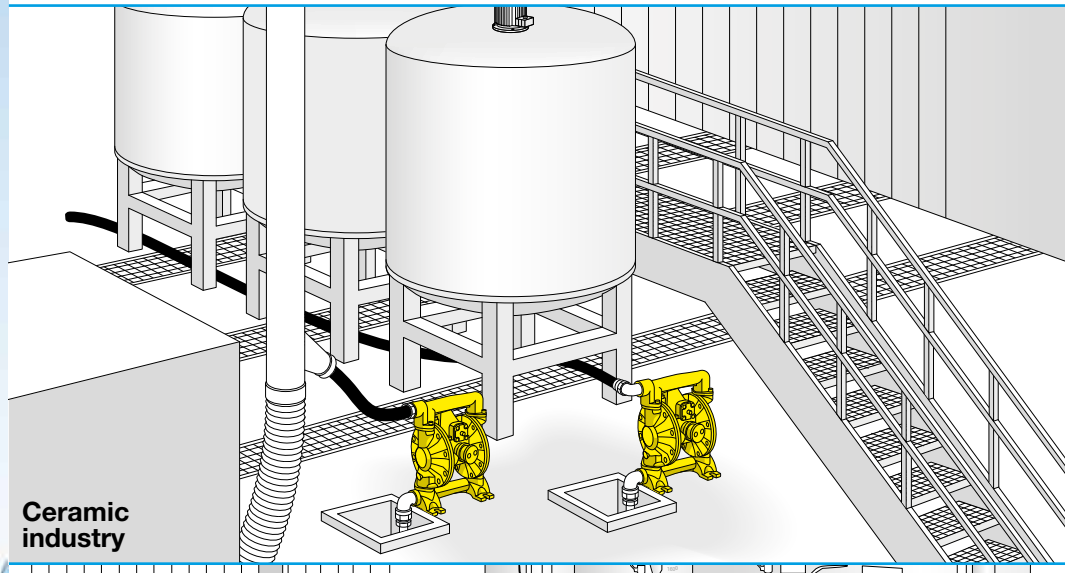

Ceramic industry

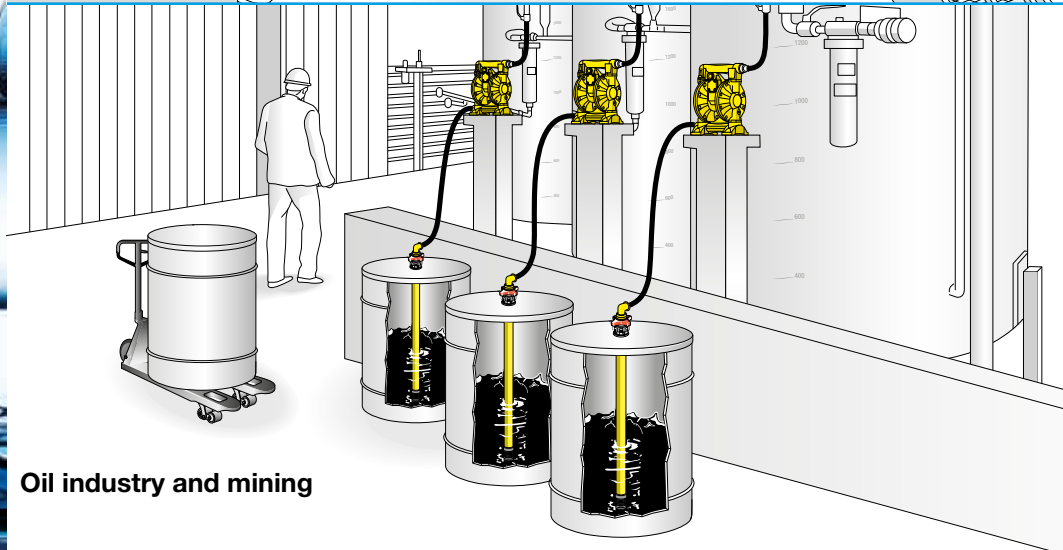

Oil industry and mining

ADVANCED FLUID
MANAGEMENT SOLUTIONS

Diaphragm pumps are the ideal solution in different working environments, also the most aggressive ones.
These are some examples of application:

- **pumping detergent liquids in car washes**
- **transfer slip and glaze in the ceramics industry**
- **distribution of adhesives, paints, cellulose pulp in the paper and printing industry**
- **pumping of spent acids, dyes and wastewater in the textile and tanning industry**
- **distribution and mixing of paints in the colors/varnishes industry**
- **pumping of corrosive and abrasive products in galvanic applications in the chemical and mechanical sector**
- **pumping of waste oils and lubricants in a garage**

EXAMPLES OF **USE** for pump entirely made of polypropylene

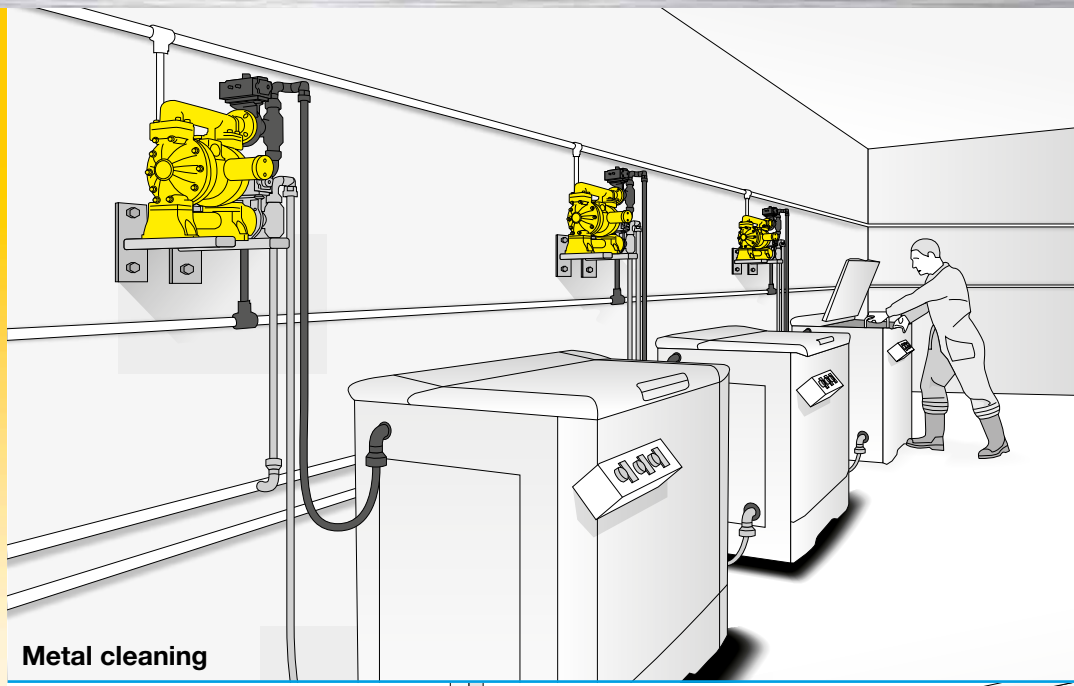

Metal cleaning

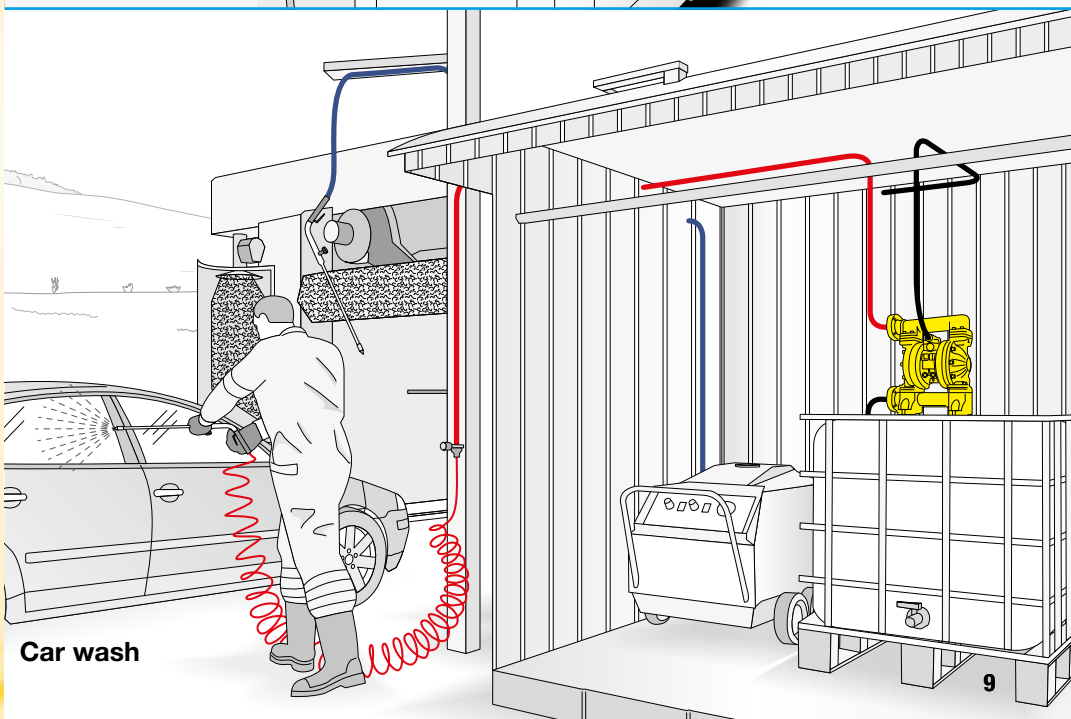

Car wash

strength points

Why choose a diaphragm pump entirely made of aluminum?

RAASM pneumatic diaphragm pumps are designed and manufactured for pumping a wide range of fluids even with **high viscosities and with suspended solids.**

In being **ATEX certified,** they can also be used for heavy applications such as in places with high humidity or with potentially explosive atmosphere.

- **ATEX certification available**
- **The wide range of materials used for the pumps makes it easy to identify the model having the best chemical compatibility with the fluid to be pumped and for the work environment**
- **All pumps are tested before the packaging to ensure the highest quality**
- **They do not become damaged in case of prolonged operation when empty**
- **Self-priming capability**
- **Easy adjustment of delivery**

Diaphragm pumps in aluminum

5 YEARS WARRANTY
Made In Italy

in accordance with the ATEX directive

TECHNICAL
CHARACTERISTICS

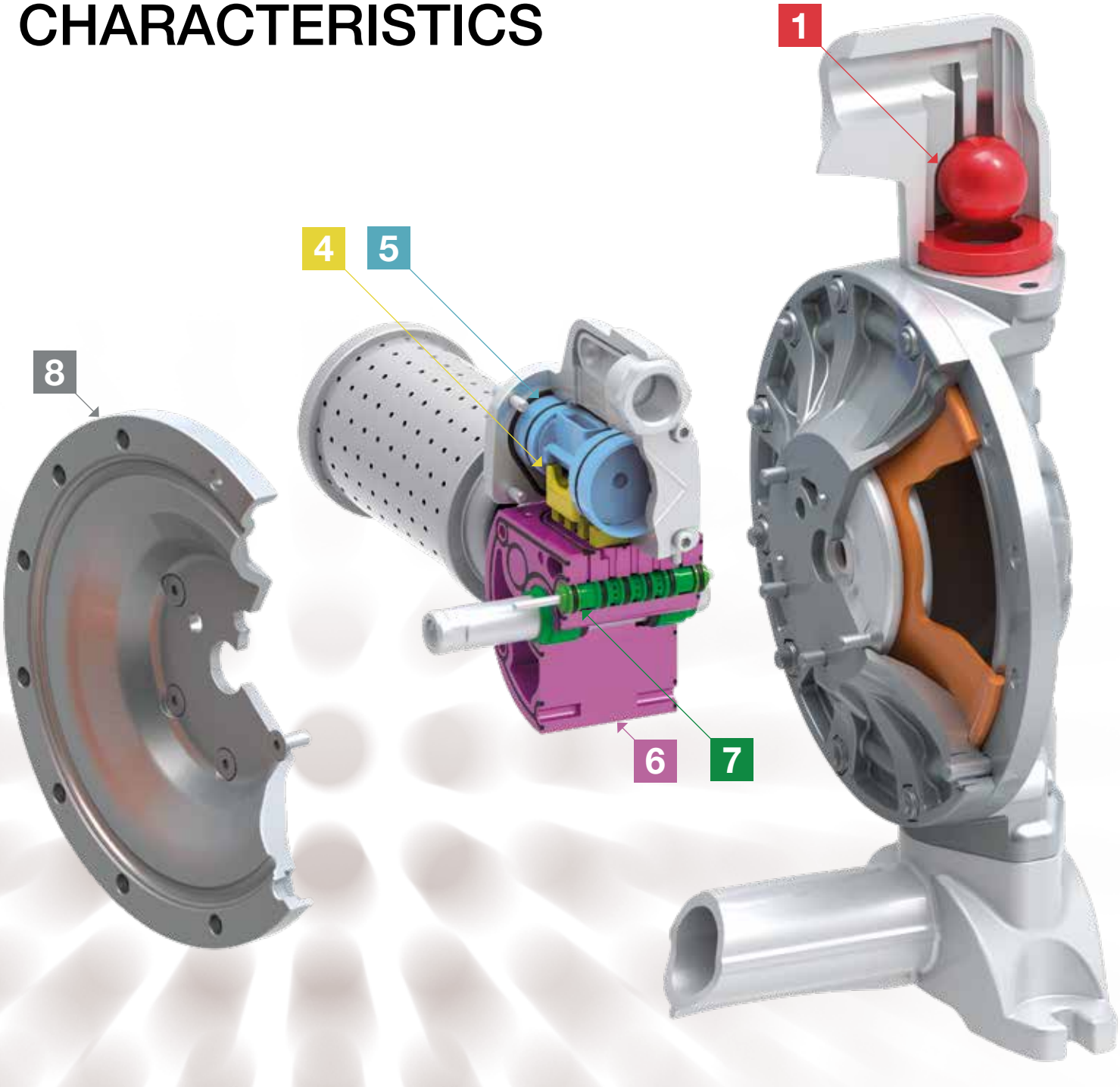

1 Ball valves designed to guarantee the total flow of the pumped fluid.

2 Total flow suction and delivery manifolds, to facilitate suction of the liquid in any situation, with threaded connections or flanged available in different diameters according to the pump models.

3 Membranes made with **different and specific materials** able to withstand many types of fluids and millions of cycles.

4 The air distribution valve ensures **perfect operation** in any operating conditions. Some examples:
- Minimum supply pressures (min. 2 bar)
- Critical fluid and ambient temperatures
- Supply pressure fluctuations

5 Air distributor unit equipped with **anti-stall reversing piston.** This piston prevents the pump from stopping at a dead point, even in critical operating conditions.

6 Pneumatic motor with **anti-ice device.** This allows the pump to maintain its performance, even if powered with untreated air.

7 The pneumatic motor block of the pump does not require any type of lubrication because the moving parts are **self-lubricating.**

8 Flanges created to withstand **heavy work conditions.**

9 Industrial design, material in aluminum with **internal and external sand blasting and nickel-plating surface treatment.** Die-casting ensures a better structural and surface finish.

1/2” - 70 l/min

1” - 170 l/min

ATEX directive
II 2 GD c IIB T4 X

Diaphragm pumps R. 1:1 for transferring, made of die-cast aluminum; they ensure lasting and reliable operation with the most common automotive and industry fluids.

Note: The max flow rate shown in the below graphics has been obtained by laboratory test.

Series				120-AB	1000-AB
membranes	balls	seats		P/N	P/N
EPDM	Acetal	Acetal		3C1/16111EAA	3C1/26111EAA
Hytrel®	Hytrel®	Hytrel®		3C1/16111HHH	3C1/26111HHH
NBR	Hytrel®	Hytrel®		3C1/16111NHH	3C1/26111NHH
Santoprene™	Santoprene™	Santoprene™		3C1/16111SSS	3C1/26111SSS
PTFE+Hytrel® *	PTFE	Polypropylene		3C1/16111TTP	3C1/26111TTP
Max pressure			bar	8	8
Max cycles per min			cpm	400	300
Litres per cycle **			l	0,188	0,590
Max suction lift			m	dry column 4,5 - wet column 7,5	dry column 5 - wet column 7,5
Max size pumpable solids			mm	1,5	3
Max working temperature ***			°C	100	100
Noise level			dB	75	75
Max air consumption (m^3/min)			m^3/min	0,80	1,40
Air working pressure			bar	2 - 6	2 - 6
Air inlet connection				G 3/8” (f)	G 3/8” (f)
Air outlet connection (muffler)				G 1/2” (f)	G 1/2” (f)
Fluid inlet connection				G 3/4” (f)	G 1.1/4” (f)
Fluid outlet connection				G 1/2” (f)	G 1” (f)
Balls for inlet and outlet					
Overall dimensions (A x B x C x D x E)			mm	201 x 160 x 256 x 145 x 100	261 x 200 x 345 x 182 x 130
Screws for pump fixing				M8	M10
Packing - Weight				N° 1 0,02 m^3 6,3 kg	N° 1 0,03 m^3 12 kg

* With PTFE membrane flow rate is 10 % lower ** Displacement per cycle may be influenced by suction lift, fluid viscosity, air pressure, number of cycles per minute
*** The materials in contact with the fluid, and the fluid as well, can restrict the pump working temperature

PUMP DIMENSIONS

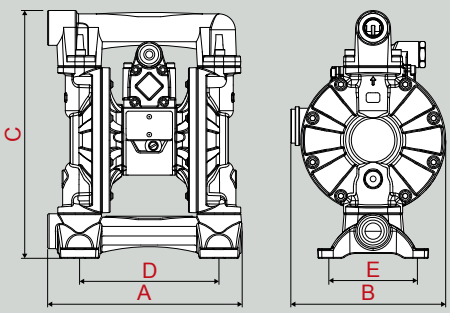

PUMP PERFORMANCE

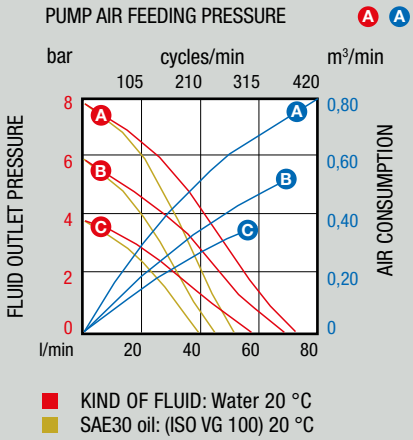

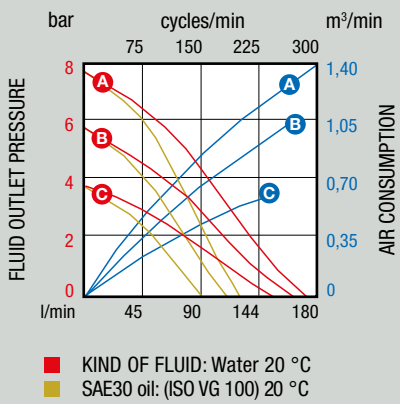

1” - 170 l/min

1.1/4” - 200 l/min

ATEX directive
II 2 GD c IIB T4 X

Diaphragm pumps R. 1:1 for transferring, made of die-cast aluminum; they ensure lasting and reliable operation with the most common automotive and industry fluids.

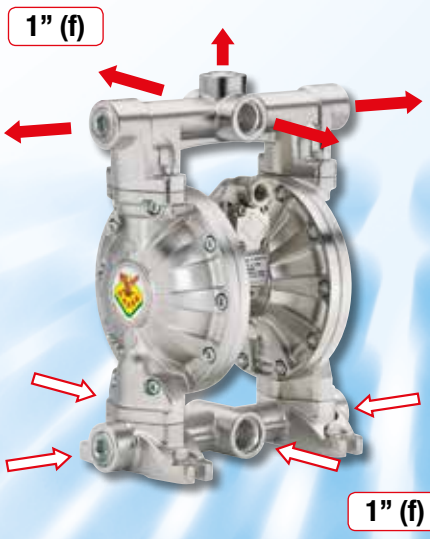

Note: The max flow rate shown in the below graphics has been obtained by laboratory test.

Series			1000-AB with multi-ported inlet/outlet	1140-AB
membranes	balls	seats	P/N	P/N
EPDM	Acetal	Acetal	3C3/26111EAA	3C1/30111EAA
Hytrel®	Hytrel®	Hytrel®	3C3/26111HHH	3C1/30111HHH
NBR	Hytrel®	Hytrel®	3C3/26111NHH	3C1/30111NHH
Santoprene™	Santoprene™	Santoprene™	3C3/26111SSS	3C1/30111SSS
PTFE+Hytrel® *	PTFE	Polypropylene	3C3/26111TTP	3C1/30111TTP
Max pressure		bar	8	8
Max cycles per min		cpm	300	260
Litres per cycle **		l	0,590	0,800
Max suction lift		m	dry column 5 - wet column 7,5	dry column 5 - wet column 7,5
Max size pumpable solids		mm	3	3
Max working temperature ***		°C	100	100
Noise level		dB	75	75
Max air consumption (m^3/min)		m^3/min	1,40	1,80
Air working pressure		bar	2 - 6	2 - 6
Air inlet connection			G 3/8” (f)	G 3/4” (f)
Air outlet connection (muffler)			G 1/2” (f)	G 1” (f)
Fluid inlet connection			4 x G 1” (f)	G 1.1/4” (f)
Fluid outlet connection			5 x G 1” (f)	G 1.1/4” (f)
Balls for inlet and outlet				
Overall dimensions (A x B x C x D x E)		mm	280 x 200 x 352 x 182 x130	286 x 238 x 386 x 199 x 137
Screws for pump fixing			M10	M10
Packing - Weight			N° 1 0,03 m^3 13 kg	N° 1 0,03 m^3 15 kg

* With PTFE membrane flow rate is 10 % lower ** Displacement per cycle may be influenced by suction lift, fluid viscosity, air pressure, number of cycles per minute
*** The materials in contact with the fluid, and the fluid as well, can restrict the pump working temperature

PUMP DIMENSIONS

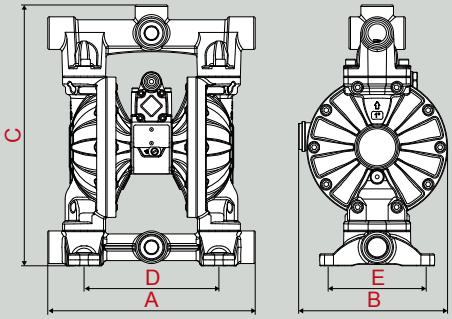

PUMP PERFORMANCE

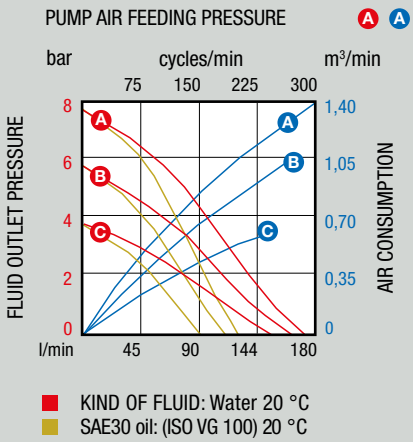

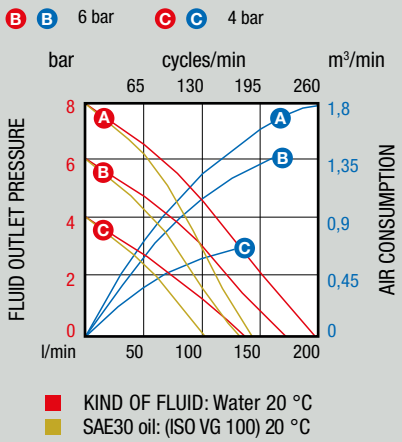

1.1/2” - 480 l/min

2” - 610 l/min

ATEX directive
II 2 GD c IIB T4 X

Diaphragm pumps R. 1:1 for transferring, made of die-cast aluminum; they ensure lasting and reliable operation with the most common automotive and industry fluids.

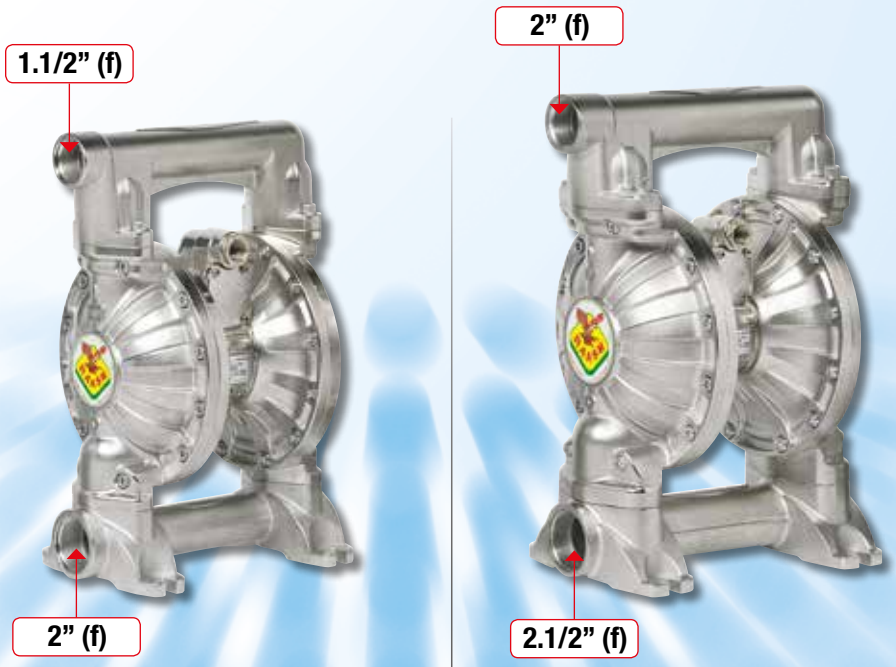

Note: The max flow rate shown in the below graphics has been obtained by laboratory test.

Series			1120-AB	2000-AB
membranes	balls	seats	P/N	P/N
EPDM	Acetal	Acetal	3C1/40111EAA	3C1/50111EAA
Hytrel®	Hytrel®	Hytrel®	3C1/40111HHH	3C1/50111HHH
NBR	Hytrel®	Hytrel®	3C1/40111NHH	3C1/50111NHH
Santoprene™	Santoprene™	Santoprene™	3C1/40111SSS	3C1/50111SSS
PTFE+Hytrel® *	PTFE	Polypropylene	3C1/40111TTP	3C1/50111TTP
Max pressure		bar	8	8
Max cycles per min		cpm	220	147
Litres per cycle **		l	2,15	4,150
Max suction lift		m	dry column 5 - wet column 7,5	dry column 5 - wet column 7,5
Max size pumpable solids		mm	5,5	6,5
Max working temperature ***		°C	100	100
Noise level		dB	78	82
Max air consumption (m^3/min)		m^3/min	3,40	4,00
Air working pressure		bar	2 - 6	2 - 6
Air inlet connection			G 3/4” (f)	G 3/4” (f)
Air outlet connection (muffler)			G 1” (f)	G 1” (f)
Fluid inlet connection			G 2” (f)	G 2.1/2” (f)
Fluid outlet connection			G 1.1/2” (f)	G 2” (f)
Balls for inlet and outlet				
Overall dimensions (A x B x C x D x E)		mm	350 x 402 x 514 x 250 x 182	427 x 435 x 616 x 305 x 227
Screws for pump fixing			M12	M12
Packing - Weight			N° 1 0,07 m^3 21,5 kg	N° 1 0,12 m^3 43 kg

* With PTFE membrane flow rate is 10 % lower ** Displacement per cycle may be influenced by suction lift, fluid viscosity, air pressure, number of cycles per minute
*** The materials in contact with the fluid, and the fluid as well, can restrict the pump working temperature

PUMP DIMENSIONS

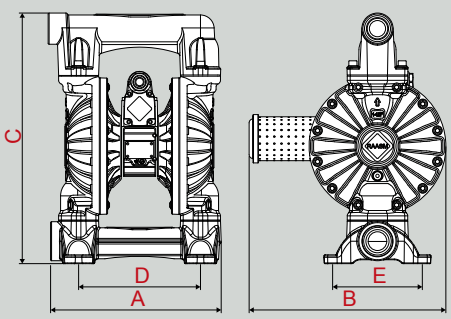

PUMP PERFORMANCE

PUMP AIR FEEDING PRESSURE A A 8 bar B B 6 bar C C 4 bar

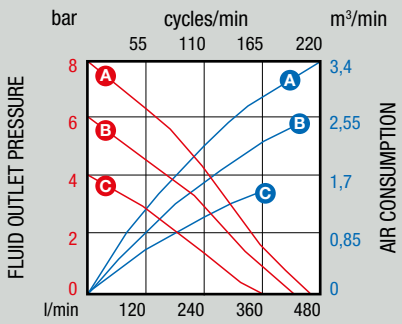

KIND OF FLUID: Water 20 °C

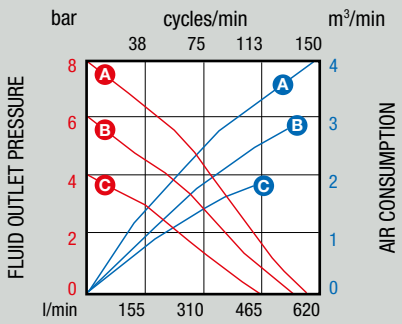

KIND OF FLUID: Water 20 °C

2” - 610 l/min

2” - 580 l/min

2” (f)

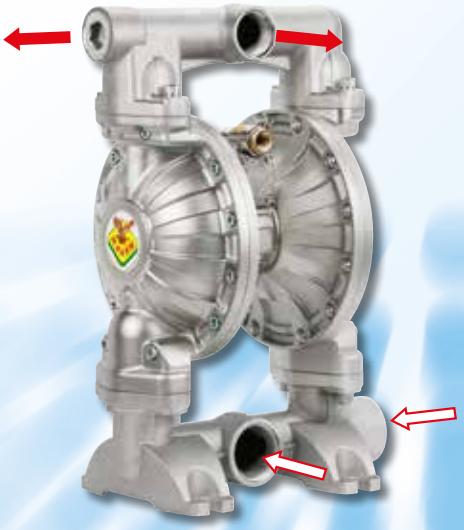

2.1/2” (f)

MODULAR WITH FLANGE 2”

MODULAR WITH FLANGE 2”

ATEX directive
II 2 GD c IIB T4 X

Diaphragm pumps R. 1:1 for transferring, made of die-cast aluminum; they ensure lasting and reliable operation with the most common automotive and industry fluids. Flanges could be rotated of 90° or 180° to help the fluid inlet and outlet and the plant connection.

Note: The max flow rate shown in the below graphics has been obtained by laboratory test.

Series			2000-AB with multi-ported inlet/outlet	2000-AB
membranes	balls	seats	P/N	P/N
EPDM	Acetal	Acetal	3C3/50111EAA	3C6/50111EAA
Hytrel®	Hytrel®	Hytrel®	3C3/50111HHH	3C6/50111HHH
NBR	Hytrel®	Hytrel®	3C3/50111NHH	3C6/50111NHH
Santoprene™	Santoprene™	Santoprene™	3C3/50111SSS	3C6/50111SSS
PTFE+Hytrel® *	PTFE	Polypropylene	3C3/50111TTP	3C6/50111TTP
Max pressure		bar	8	8
Max cycles per min		cpm	147	147
Litres per cycle **		l	4,150	3,950
Max suction lift		m	dry column 5 - wet column 7,5	dry column 5 - wet column 7,5
Max size pumpable solids		mm	6,5	6,5
Max working temperature ***		°C	100	100
Noise level		dB	82	82
Max air consumption (m³/min)		m³/min	4,00	4,00
Air working pressure		bar	2 - 6	2 - 6
Air inlet connection			G 3/4” (f)	G 3/4” (f)
Air outlet connection (muffler)			G 1” (f)	G 1” (f)
Fluid inlet connection			G 2.1/2” (f)	ANSI 150 - DIN PN 10 - JIS 10K 2” (50 mm)
Fluid outlet connection			G 2” (f)	ANSI 150 - DIN PN 10 - JIS 10K 2” (50 mm)
Balls for inlet and outlet				
Overall dimensions (A x B x C x D x E)		mm	449 x 435 x 675 x 255 x 227	410 x 435 x 710 x 305 x 238
Screws for pump fixing			M12	M12
Packing - Weight			N° 1 0,12 m³ 45 kg	N° 1 0,13 m³ 50 kg

* With PTFE membrane flow rate is 10 % lower ** Displacement per cycle may be influenced by suction lift, fluid viscosity, air pressure, number of cycles per minute
*** The materials in contact with the fluid, and the fluid as well, can restrict the pump working temperature

PUMP DIMENSIONS

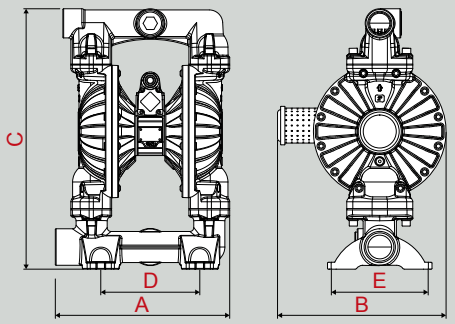

PUMP PERFORMANCE

PUMP AIR FEEDING PRESSURE A A 8 bar B B 6 bar C C 4 bar

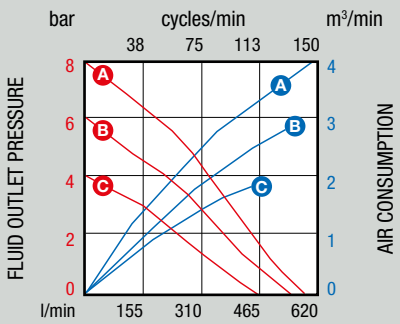

KIND OF FLUID: Water 20 °C

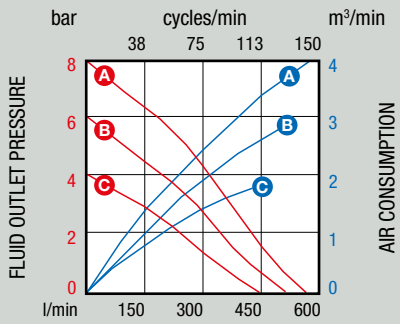

KIND OF FLUID: Water 20 °C

strength points

Why choose a diaphragm pump made of aluminum and polypropylene?

RAASM pneumatic diaphragm pumps are designed and manufactured for pumping a wide range of fluids even with high viscosities and with suspended solids.

In particular the diaphragm pump of this family can be used with corrosive fluids and aqueous solutions thanks to the manifolds made in polypropylene.

- **ATEX certification available**
- **The wide range of materials used for the pumps makes it easy to identify the model having the best chemical compatibility with the fluid to be pumped and for the work environment**
- **1/2” with reinforced thread thanks to a AISI 316 stainless steel ring**
- **Ball seats in AISI 316 stainless steel and polypropylene**
- **All pumps are tested before the packaging to ensure the highest quality**
- **They do not become damaged in case of prolonged operation when empty**

Diaphragm pumps in aluminum and polypropylene

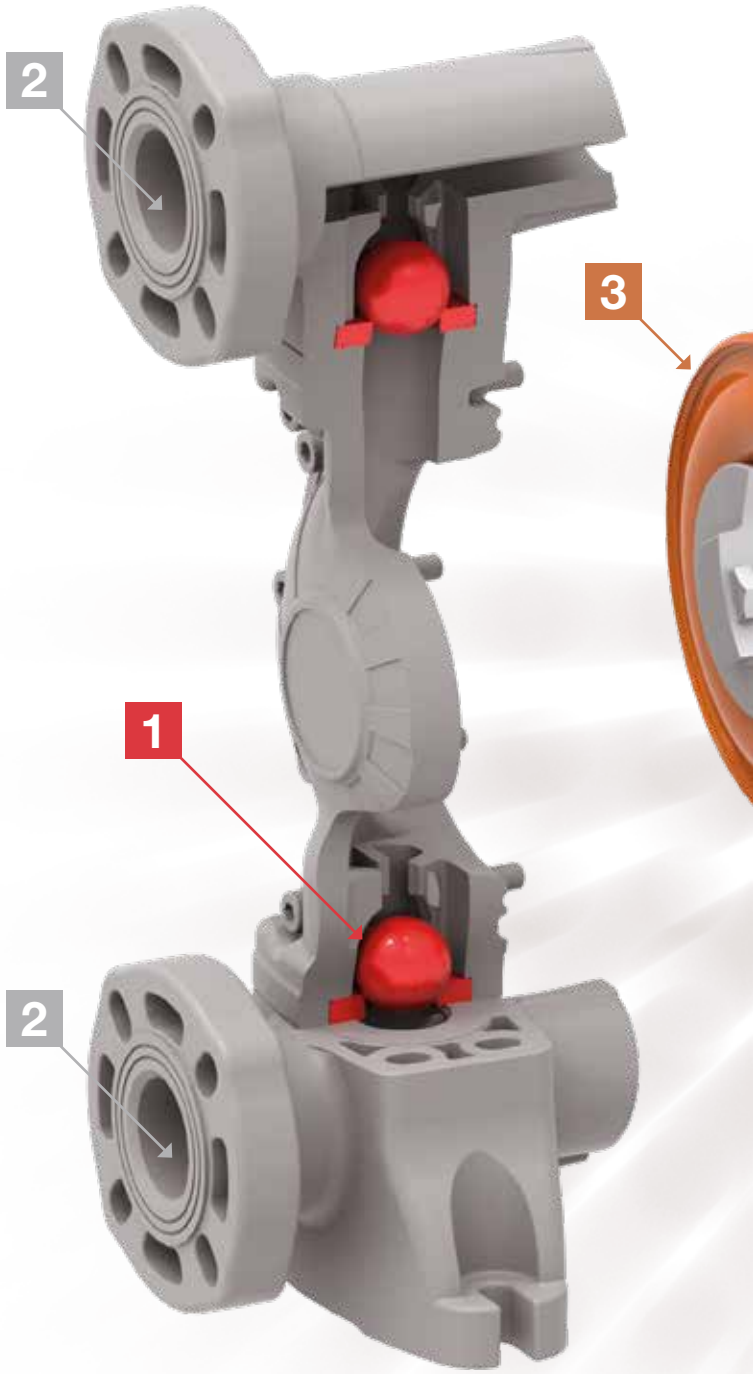

5 YEARS WARRANTY
Made In Italy

in accordance with the ATEX directive

TECHNICAL
CHARACTERISTICS

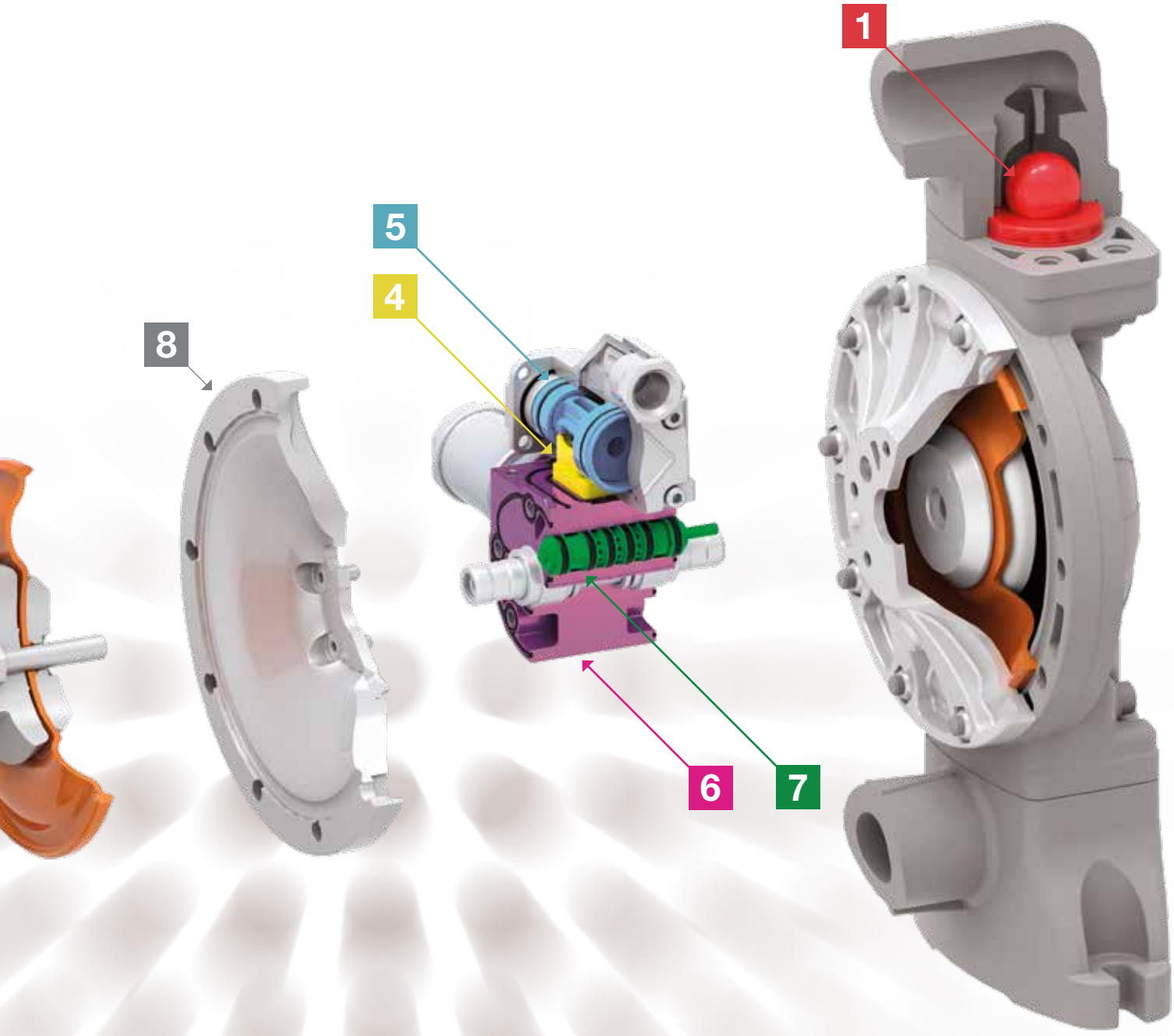

1 Ball valves designed to guarantee the total flow of the pumped fluid.
The ball seats are in AISI 316 stainless steel (versions 1") or in AISI 316 stainless steel and polypropylene (versions 1/2").

2 Total flow suction and delivery manifolds, to facilitate suction of the liquid in any situation, with threaded connections or flanged available in different diameters according to the pump models.
There is a AISI 316 stainless steel ring to reinforce the thread (versions 1/2").

3 Membranes made with **different and specific materials** able to withstand many types of fluids and millions of cycles.

4 The air distribution valve **ensures perfect operation** in any operating conditions.
Some examples:
- Minimum supply pressures (min. 2 bar)
- Critical fluid and ambient temperatures
- Supply pressure fluctuations.

5 Air distributor unit equipped with **anti-stall reversing piston.** This piston prevents the pump from stopping at a dead point, even in critical operating conditions.

6 Pneumatic motor with **anti-ice device.** This allows the pump to maintain its performance, even if powered with untreated air.

7 The pneumatic motor block of the pump does not require any type of lubrication because the moving parts are **self-lubricating.**

8 Flanges created to withstand **heavy work conditions.**

9 Industrial design, material in aluminum with **internal and external sand blasting andnickel-plating surface treatment.** Die-casting ensures a better structural and surface finish.

1/2” - 60 l/min

ATEX directive
II 3 GD c TX

Diaphragm pumps R. 1:1 for transferring fluids, made of molding injected polypropylene with motor made in aluminum; they ensure lasting and reliable operation even in extreme conditions and with agressive fluids.

Note: The max flow rate shown in the below graphics has been obtained by laboratory test.

Series			120-PPAB with multi-ported inlet/outlet	120-PPAB dual inlet/multi-ported outlet
membranes	balls	seats	P/N	P/N
EPDM	Acetal	Polypropylene and AISI 316	2B3/16117EA5	2B8/16117EA5
Hytrel®	Hytrel®	Polypropylene and AISI 316	2B3/16117HH5	2B8/16117HH5
NBR	Hytrel®	Polypropylene and AISI 316	2B3/16117NH5	2B8/16117NH5
Santoprene™	Santoprene™	Polypropylene and AISI 316	2B3/16117SS5	2B8/16117SS5
PTFE+Hytrel® *	PTFE	Polypropylene and AISI 316	2B3/16117TT5	2B8/16117TT5
Max pressure		bar	8	8
Max cycles per min		cpm	330	330
Litres per cycle **		l	0,188	0,188
Max suction lift		m	dry column 4,5 - wet column 7,5	dry column 4,5 - wet column 7,5
Max size pumpable solids		mm	1,5	1,5
Max working temperature ***		°C	65	65
Noise level		dB	75	75
Max air consumption (m^3/min)		m^3/min	0,50	0,50
Air working pressure		bar	2 - 6	2 - 6
Air inlet connection			G 3/8” (f)	G 3/8” (f)
Air outlet connection (muffler)			G 1/2” (f)	G 1/2” (f)
Fluid inlet connection			G 3/4” (f) - G 1” (f) for drum	**dual inlet** G 3/4” (f)
Fluid outlet connection			G 1/2” (f)	G 1/2” (f)
Balls for inlet and outlet				
Overall dimensions (A x B x C x D x E)		mm	220 x 160 x 327 x 145 x 100	220 x 160 x 327 x 145 x 100
Screws for pump fixing			M8	M8
Packing - Weight			N° 1 0,02 m^3 5,8 kg	N° 1 0,02 m^3 5,7 kg

* With PTFE membrane flow rate is 10 % lower ** Displacement per cycle may be influenced by suction lift, fluid viscosity, air pressure, number of cycles per minute
*** The materials in contact with the fluid, and the fluid as well, can restrict the pump working temperature

PUMP DIMENSIONS

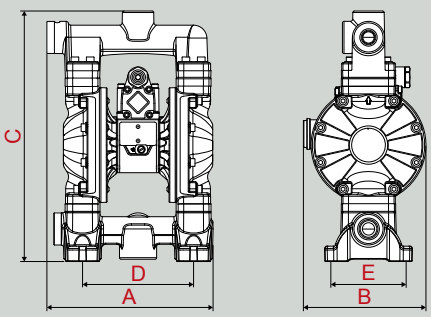

PUMP PERFORMANCE

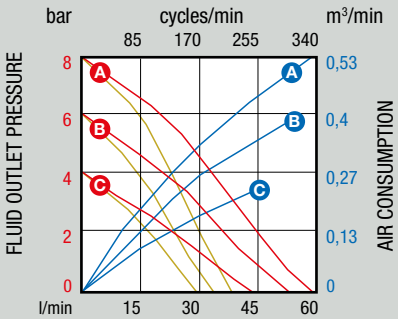

PUMP AIR FEEDING PRESSURE
A A 8 bar
B B 6 bar
C C 4 bar

KIND OF FLUID: Water 20 °C
SAE30 oil: (ISO VG 100) 20 °C

1” - 170 l/min

ATEX directive
II 3 GD c TX

Diaphragm pumps R. 1:1 for transferring fluids, made of molding injected polypropylene with motor made in aluminum. These versions have got 1” flange to connect the pump with the plant.
Use the new AISI 304 stainless steel flange available in the accessories section for the piping connection.

Note: The max flow rate shown in the below graphics has been obtained by laboratory test.

Series			1000-PPAB	1000-PPAB dual inlet
membranes	balls	seats	P/N	P/N
EPDM	Acetal	AISI 316 stainless steel	2B4/26117EAI	2B7/26117EAI
Hytrel®	Hytrel®	AISI 316 stainless steel	2B4/26117HHI	2B7/26117HHI
NBR	Hytrel®	AISI 316 stainless steel	2B4/26117NHI	2B7/26117NHI
Santoprene™	Santoprene™	AISI 316 stainless steel	2B4/26117SSI	2B7/26117SSI
PTFE+Hytrel® *	PTFE	AISI 316 stainless steel	2B4/26117TTI	2B7/26117TTI
Max pressure		bar	8	8
Max cycles per min		cpm	300	300
Litres per cycle **		l	0,590	0,590
Max suction lift		m	dry column 5 - wet column 7,5	dry column 5 - wet column 7,5
Max size pumpable solids		mm	3	3
Max working temperature ***		°C	65	65
Noise level		dB	75	75
Max air consumption (m^3/min)		m^3/min	1,60	1,60
Air working pressure		bar	2 - 6	2 - 6
Air inlet connection			G 3/8” (f)	G 3/8” (f)
Air outlet connection (muffler)			G 1/2” (f)	G 1/2” (f)
Fluid inlet connection			ANSI 150 - DIN PN 10 - JIS 10K 1” (25 mm) proneness to G 1.1/4” (f) thread	**dual inlet** ANSI 150 - DIN PN 10 - JIS 10K 1” (25 mm) proneness to G 1.1/4” (f) thread
Fluid outlet connection			ANSI 150 - DIN PN 10 - JIS 10K 1” (25 mm) proneness to G 1.1/4” (f) thread	ANSI 150 - DIN PN 10 - JIS 10K 1” (25 mm) proneness to G 1.1/4” (f) thread
Balls for inlet and outlet				
Overall dimensions (A x B x C x D x E)		mm	305 x 200 x 420 x 191 x 130	357 x 200 x 420 x 191 x 130
Screws for pump fixing			M10	M10
Packing - Weight			N° 1 0,03 m^3 7 kg	N° 1 0,03 m^3 12,1 kg

* With PTFE membrane flow rate is 10 % lower ** Displacement per cycle may be influenced by suction lift, fluid viscosity, air pressure, number of cycles per minute
*** The materials in contact with the fluid, and the fluid as well, can restrict the pump working temperature

PUMP DIMENSIONS

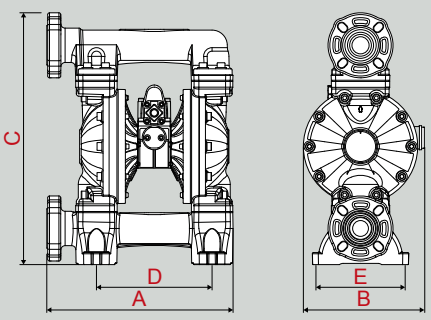

PUMP PERFORMANCE

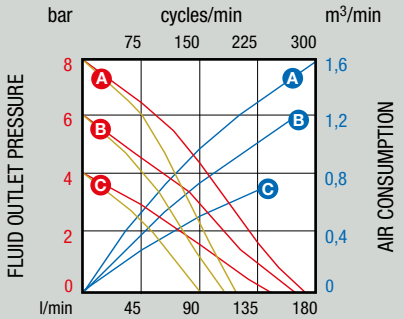

PUMP AIR FEEDING PRESSURE
A A 8 bar
B B 6 bar
C C 4 bar

KIND OF FLUID: Water 20 °C
SAE30 oil: (ISO VG 100) 20 °C

strength points

Diaphragm pumps in polypropylene

Why choose a diaphragm pump entirely made of polypropylene?

RAASM pneumatic diaphragm pumps completely made of polypropylene are made to work in particularly aggressive work atmospheres, with a wide range of fluids, also corrosive, with high viscosity and solid parts in suspension.

- **Suitable in environments with aggressive atmospheres**
- **Can be used with water or corrosive solutions**
- **Higher quality thanks also to the stainless steel screws**
- **Built with anti-stalling and anti-icing devices to maintain unaltered the performances over time**
- **Silencer in plastic material for corrosive environments with stainless steel cage.**
- **1/2” pumps with reinforced thread thanks to a AISI 316 stainless steel ring**
- **Usable with viscous fluids and with solid parts in suspension**
- **Easy and on-site maintainability by requesting predefined replacement kits**
- **Self-priming capability**
- **All pumps are tested before the packaging to ensure the highest quality**

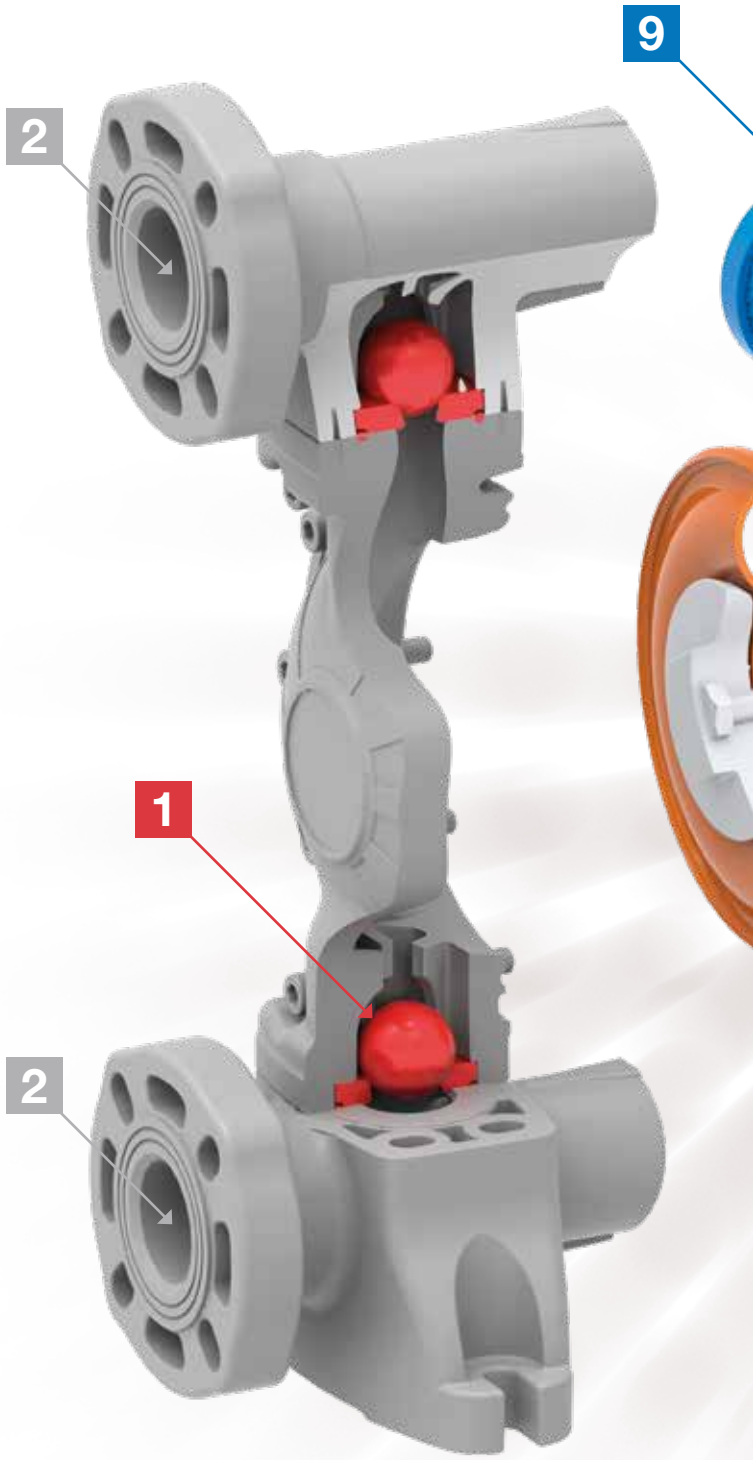

5 YEARS WARRANTY
CE Made In Italy

TECHNICAL
CHARACTERISTICS

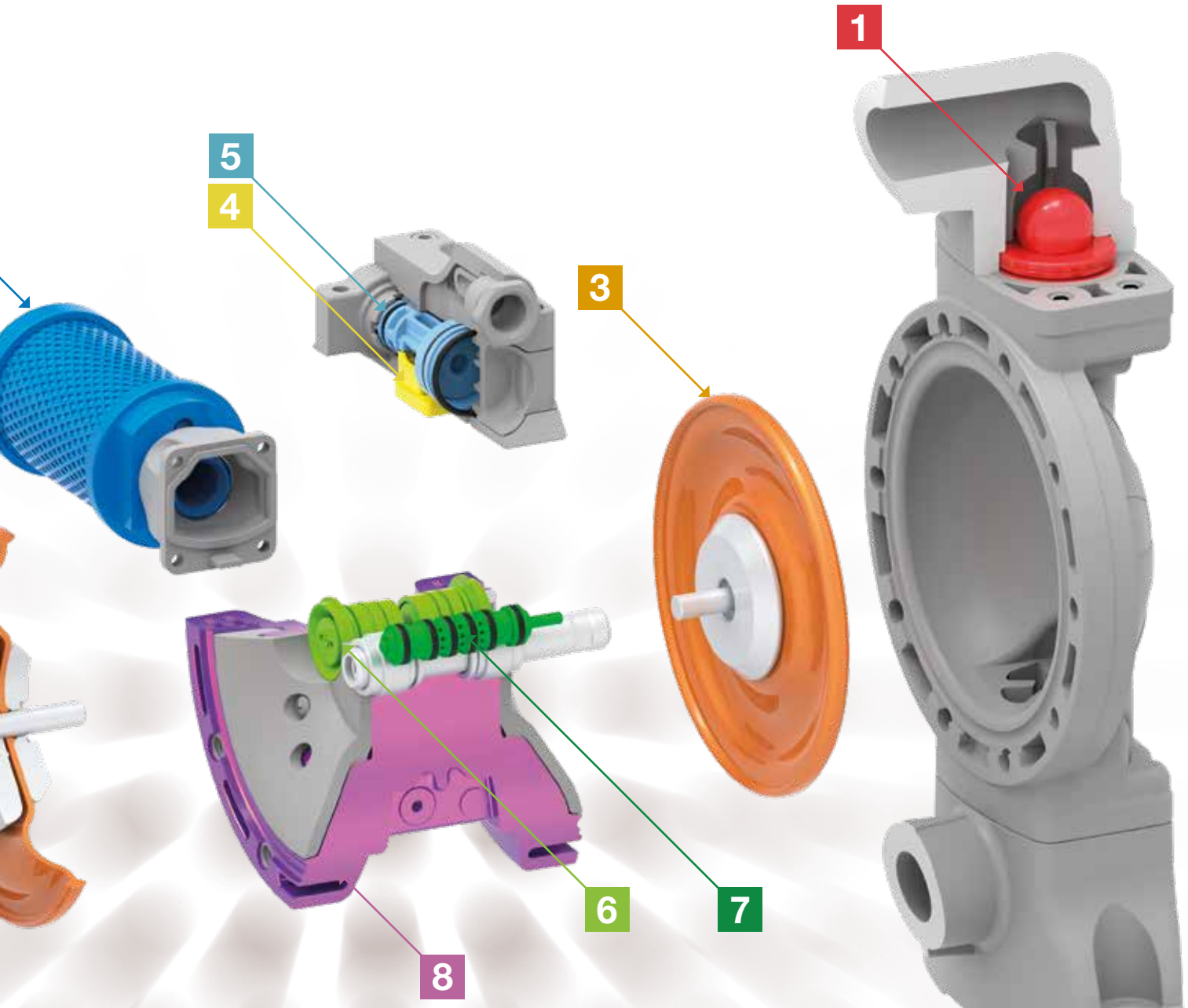

1 Balls and ball seats **in many types of materials** to guarantee chemical compatibility according to the fluid to be pumped. **Easy to clean or replace** as required. **The ball seats are in AISI 316 stainless steel (versions 1") or in AISI 316 stainless steel and polypropylene (versions 1/2").**

2 Total flow suction and delivery manifolds, to facilitate suction of the liquid in any situation, with threaded connections or flanged available in different diameters according to the pump models. **There is a AISI 316 stainless steel ring to reinforce the thread (versions 1/2").**

3 Membranes made with **different and specific materials** able to withstand many types of fluids and millions of cycles.

4 The air distribution valve ensures **perfect operation** in any operating conditions, some examples:
- Minimum supply pressures (min. 2 bar)
- Fluid and environment critical temperatures
- Supply pressure fluctuations

5 Air distributor unit equipped with **anti-stall** reversing piston. This piston prevents the pump from stopping at a dead point, even in critical operating conditions.

6 Pneumatic motor **anti-icing** device made of plastic material. This allows the pump to maintain its unaltered performance even if powered with untreated air.

7 The pneumatic motor block of the pump does not require any type of lubrication because the moving parts are **self-lubricating.**

8 Pump body in **polypropylene** with integrated flanges and co-molded inserts to guarantee elevated tightening torques.

9 Silencer made of **plastic material** with increased exhaust system designed to withstand corrosive environments also thanks to stainless steel cage.

1/2” - 65 l/min

Diaphragm pumps R. 1:1 for fluids transfer, produced entirely in polypropylene, are recommended for applications with industrial fluids, also corrosive, and in working environments with aggressive atmospheres.

Note: The max flow rate shown in the below graphics has been obtained by laboratory test.

Series			120-PPB with multi-ported inlet/outlet	120-PPB dual inlet/multi-ported outlet
membranes	**balls**	**seats**	**P/N**	**P/N**
EPDM	Acetal	Polypropylene and AISI 316	**2A3/1677EA5**	**2A8/1677EA5**
Hytrel®	Hytrel®	Polypropylene and AISI 316	**2A3/1677HH5**	**2A8/1677HH5**
NBR	Hytrel®	Polypropylene and AISI 316	**2A3/1677NH5**	**2A8/1677NH5**
Santoprene™	Santoprene™	Polypropylene and AISI 316	**2A3/1677SS5**	**2A8/1677SS5**
PTFE+Hytrel®	PTFE	Polypropylene and AISI 316	**2A3/1677TT5**	**2A8/1677TT5**
Max pressure		bar	8	8
Max cycles per min		cpm	350	350
Litres per cycle **		l	0,188	0,188
Max suction lift		m	dry column 4,5 - wet column 7,5	dry column 4,5 - wet column 7,5
Max size pumpable solids		mm	1,5	1,5
Max working temperature ***		°C	65	65
Noise level		dB	76	76
Max air consumption (m^3/min)		m^3/min	0,89	0,89
Air working pressure		bar	2 - 6	2 - 6
Air inlet connection			G 3/8” (f)	G 3/8” (f)
Air outlet connection (muffler)			G 3/4” (f)	G 3/4” (f)
Fluid inlet connection			G 3/4” (f) - G 1” (f) for drum	**dual inlet** G 3/4” (f)
Fluid outlet connection			G 1/2” (f)	G 1/2” (f)
Balls for inlet and outlet				
Overall dimensions (A x B x C x D x E)		mm	208 x 220 x 326 x 145 x 100	220 x 220 x 326 x 145 x 100
Screws for pump fixing			M8	M8
Packing - Weight			N° 1 0,02 m^3 5,8 kg	N° 1 0,02 m^3 5,8 kg

* With PTFE membrane flow rate is 10 % lower ** Displacement per cycle may be influenced by suction lift, fluid viscosity, air pressure, number of cycles per minute
*** The materials in contact with the fluid, and the fluid as well, can restrict the pump working temperature

PUMP DIMENSIONS

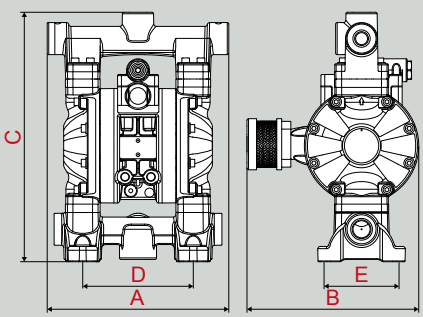

PUMP PERFORMANCE

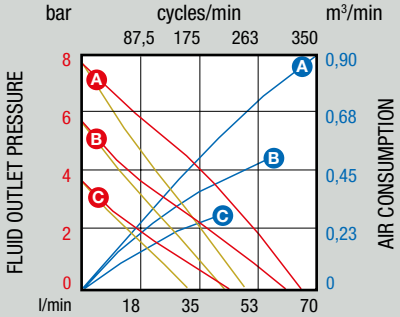

PUMP AIR FEEDING PRESSURE

- A A 8 bar
- B B 6 bar
- C C 4 bar

KIND OF FLUID: Water 20 °C
SAE30 oil: (ISO VG 100) 20 °C

1” - 145 l/min

The family of 1” diaphragm pumps, R. 1:1 for fluid transfer, produced entirely in polypropylene, maintain their performance on applications with industrial fluids, also aggressive, and in working environments with corrosive atmospheres, offering an unquestionable higher capacity.

Note: The max flow rate shown in the below graphics has been obtained by laboratory test.

Series			1000-PPB	1000-PPB dual inlet
membranes	balls	seats	P/N	P/N
EPDM	Acetal	AISI 316 stainless steel	2A4/2677EAI	2A7/2677EAI
Hytrel®	Hytrel®	AISI 316 stainless steel	2A4/2677HHI	2A7/2677HHI
NBR	Hytrel®	AISI 316 stainless steel	2A4/2677NHI	2A7/2677NHI
Santoprene™	Santoprene™	AISI 316 stainless steel	2A4/2677SSI	2A7/2677SSI
PTFE+Hytrel®	PTFE	AISI 316 stainless steel	2A4/2677TTI	2A7/2677TTI
Max pressure		bar	8	8
Max cycles per min		cpm	270	270
Litres per cycle **		l	0,540	0,540
Max suction lift		m	dry column 5 - wet column 7,5	dry column 5 - wet column 7,5
Max size pumpable solids		mm	3	3
Max working temperature ***		°C	65	65
Noise level		dB	78	78
Max air consumption (m^3/min)		m^3/min	1,1	1,1
Air working pressure		bar	2 - 6	2 - 6
Air inlet connection			G 3/8” (f)	G 3/8” (f)
Air outlet connection (muffler)			G 3/4” (f)	G 3/4” (f)
Fluid inlet connection			ANSI 150 - DIN PN 10 - JIS 10K 1” (25 mm) proneness to G 1.1/4” (f) thread	**dual inlet** ANSI 150 - DIN PN 10 - JIS 10K 1” (25 mm) proneness to G 1.1/4” (f) thread
Fluid outlet connection			ANSI 150 - DIN PN 10 - JIS 10K 1” (25 mm) proneness to G 1.1/4” (f) thread	ANSI 150 - DIN PN 10 - JIS 10K 1” (25 mm) proneness to G 1.1/4” (f) thread
Balls for inlet and outlet				
Overall dimensions (A x B x C x D x E)		mm	305 x 300 x 420 x 191 x 130	357 x 300 x 420 x 191 x 130
Screws for pump fixing			M10	M10
Packing - Weight			N° 1 0,03 m^3 9,6 kg	N° 1 0,03 m^3 9,6 kg

* With PTFE membrane flow rate is 10 % lower ** Displacement per cycle may be influenced by suction lift, fluid viscosity, air pressure, number of cycles per minute
*** The materials in contact with the fluid, and the fluid as well, can restrict the pump working temperature

PUMP DIMENSIONS

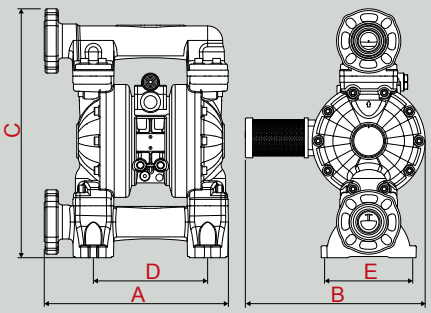

PUMP PERFORMANCE

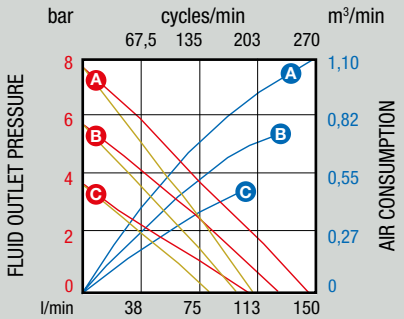

PUMP AIR FEEDING PRESSURE

- A A 8 bar
- B B 6 bar
- C C 4 bar

KIND OF FLUID: Water 20 °C
SAE30 oil: (ISO VG 100) 20 °C

Accessories for

P/N **37819**
Pressure regulator
with condensate discharge filter and pressure gauge,
- connections
G 3/8” (f) x G 3/8” (f) for application at the start of the compressed air line feeding the pump

P/N **37815**
Pressure regulator
with condensate discharge filter and pressure gauge,
- connections
G 1/2” (f) x G 1/2” (f) for application at the start of the compressed air line feeding the pump

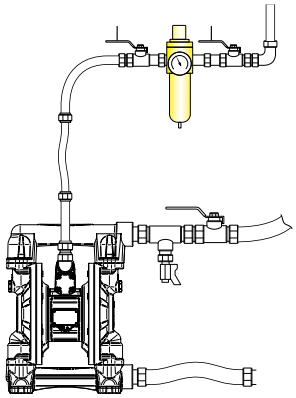

P/N **37821**
Pressure regulator
with condensate discharge filter, air lubricator and pressure gauge.
- connections
G 3/8” (f) x G 3/8” (f)
the system guarantees that the pump feed air is free of condensate

P/N **37817**
Pressure regulator
with condensate discharge filter, air lubricator and pressure gauge.
- connections
G 1/2” (f) x G 1/2” (f)
the system guarantees that the pump feed air is free of condensate

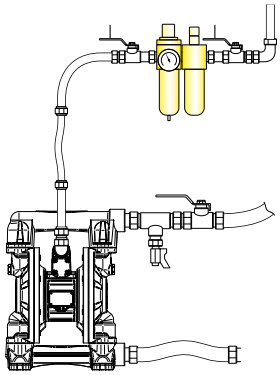

P/N **38097**
Flow regulator chamber
G 3/4” (f) x G 3/4” (f) equipped with:
- one-way valve eliminates sudden pressure
- changes, ensuring a regular flow
- suitable for R 1:1 - 3:1 - 5:1 pumps
- max pressure 100 bar

PRESSURE TREND OF PUMP OUTLET

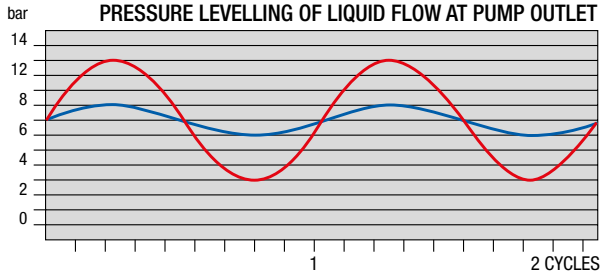

with pump R 3:1 - 8 bar

- without chamber
- with chamber

P/N **KR4506**
Earthing cable provided with plier.
In environments with risk of explosion (i.e. with a potentially explosive atmosphere according to the ATEX directive) it is mandatory to connect to the ground both the pump and other equipment placed in the work area.

diaphragm pumps in...

aluminum

aluminum and polypropylene

polypropylene

Accessories for

Mufflers reduce exponentially the noise level perceived. They decrease the pump outlet air level noise bringing it to a comfortable level, optimizing the air flow and so increasing the pump performance.

P/N **32/89**
Increased muffler G 1/2" (m) suitable for 1/2" and 1" pumps with aluminum motor.

P/N **32/90**
Muffler G 3/4" (m) in polypropylene for 1/2" and 1" pumps with plastic motor.

P/N **32/91**
Muffler G 1" (m) for 1.1/4", 1.1/2" and 2" pumps with aluminum motor. Suggested with very dusty environments.

P/N **32/92**
Muffler G 1" (m) for 1.1/4", 1.1/2" and 2" pumps with aluminum motor.

MUFFLER STANDARD INSTALLATION

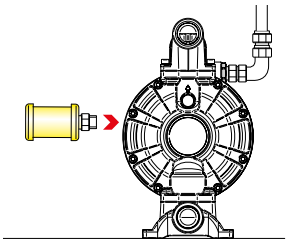

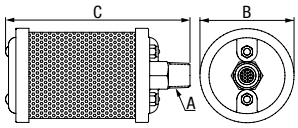

P/N	A	B (mm)	C (mm)
32/89	1/2"	40	80
32/90	3/4"	67	131
32/91	1"	100	220
32/92	1"	64	131

MUFFLER REMOTE INSTALLATION

In case of dangerous fluids pumping please move the muffler in a safe zone away from the working environments

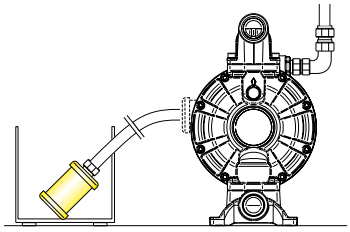

P/N **33590**
Wall bracket in painted steel for wall-mounting of diaphragm pumps 1/2" and 3/4" and screws for pump fixing M8.

P/N **33591**
Wall bracket in painted steel for wall-mounting of diaphragm pumps 1" and 1.1/4" and screws for pump fixing M10.

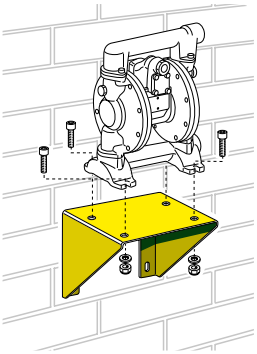

P/N **KR33/90**
Antivibration kit in SBR rubber
ø 30 x h. 20 thread M/M - M8 for 1/2" and 3/4" diaphragm pump. It reduces the vibrations in heavy applications.

P/N **KR33/91**
Antivibration kit in SBR rubber
ø 50 x h. 30 thread M/M - M10 for 1" and 1.1/4" diaphragm pump. It reduces the vibrations in heavy applications.

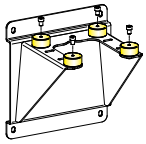

P/N **KR33/88**
Antivibration kit in SBR rubber
ø 30 x h. 20 thread F/F - M12 for 1.1/2" and 2" diaphragm pump. It reduces the vibrations in heavy applications.

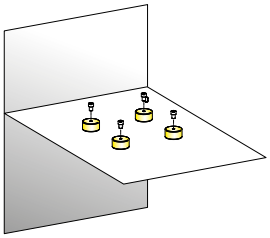

diaphragm pumps in...

aluminum

aluminum and polypropylene

polypropylene

Accessories for diaphragm pump in...

aluminum

aluminum and polypropylene

P/N **32/95 ***
1” stainless steel AISI 304 flange suitable to connect the pump with the plant. Thread G 1” (f)

P/N **32/96 ***
1” polypropylene flange suitable to connect the pump with the plant. Thread G 1” (f)

P/N **32/97 ***
2” aluminum flange suitable to connect the pump with the plant. Thread G 1” (f)

* accessory only for flanged diaphragm pumps

P/N **33574**
Hose holder ø 1.3/4” (47,5 mm) with connection G 1.1/4” (m)

P/N **33575**
Hose holder ø 1.3/4” (47,5 mm) with connection G 1.1/2” (m)

P/N **33576**
Hose holder ø 1.3/4” (47,5 mm) with connection G 2” (m)

P/N **38080**
Hose holder ø 1.1/4” (31,4 mm) with connection G 3/4” (m)

P/N **38081**
Hose holder ø 1.1/4” (31,4 mm) with connection G 1” (m)

P/N **38082**
Hose holder ø 1.1/4” (31,4 mm) with connection G 1.1/4” (m)

P/N **33571**
Hose holder ø 3/4” (22 mm) with connection G 3/4” (m) in AISI 304 stainless steel

P/N **38083**
Hose holder ø 3/4” (22 mm) with connection G 1” (m) in AISI 304 stainless steel

polypropylene

P/N **38026**
Flexible suction tube 2 m
- ø 30,5 x ø 39 mm

P/N **38028**
Flexible suction tube 1 m
- ø 30,5 x ø 39 mm

P/N **33584**
Flexible suction tube 2 m
- ø 45 x ø 57 mm

P/N **33426**
Flexible suction tube 2 m
- ø 19,5 x ø 27 mm

P/N **33434**
Bung adaptor for pump
with ø 34 mm suction tube

P/N **10/15**
Bung adaptor for pump
with ø 53 mm suction tube

P/N **33581**
Rigid suction tube ø 34 mm
- length 940 mm

P/N **33582**
Rigid suction tube ø 34 mm
- length 1240 mm

P/N **33586**
Rigid suction tube ø 53 mm
- length 940 mm

P/N **33588**
Rigid suction tube ø 53 mm
- length 1240 mm

P/N **33594**
Rigid suction tube ø 34 mm
- length 1500 mm

P/N **33569**
Stainless steel suction tube ø 34 mm
- length 1240 mm straight connection ithout joint

P/N **33579**
Stainless steel suction tube ø 34 mm
- length 940 mm

P/N **33580**
Stainless steel suction tube ø 34 mm
- length 1240 mm

P/N **33596**
Stainless steel suction tube ø 34 mm
- length 1460 mm

SUCTION TUBES KITS AVAILABLE

P/N **33583**
Rigid suction tube ø 34 mm
- length 940 mm

P/N **33585**
Rigid suction tube ø 34 mm
- length 1240 mm

P/N **33587**
Rigid suction tube kit ø 53 mm
- length 940 mm

P/N **33589**
Rigid suction tube kit ø 53 mm
- length 1240 mm

P/N **33595**
Rigid suction tube kit ø 34 mm
- length 1500 mm

P/N **33577**
Stainless steel rigid suction tube kit ø 34 mm
- length 940 mm

P/N **33578**
Stainless steel rigid suction tube kit ø 34 mm
- length 1260 mm

P/N **33597**
Stainless steel rigid suction tube kit ø 34 mm
- length 1460 mm

Pump configuration

Exploded view of the pump, showing its main parts and thereby facilitating the choice for a custom configuration.

The table summarises the pump configurations available, allowing the user to create his own personalised code whenever the models listed on the leaflet do not meet the specific requirements.

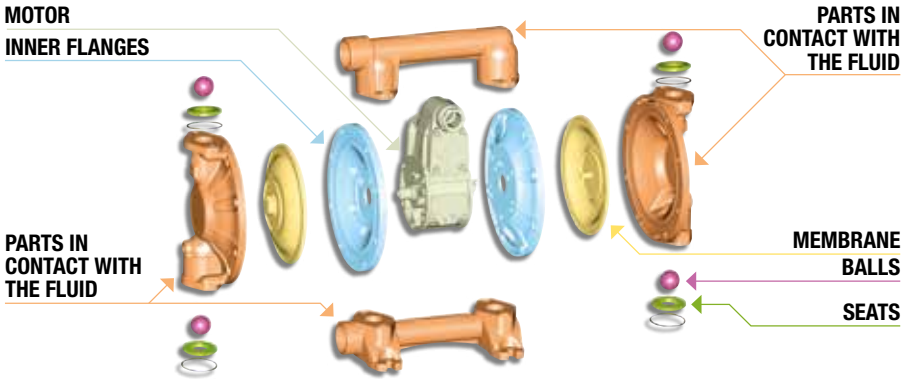

Two types of ATEX certifications are available, for zone 2 or for zone 1, depending on the materials making up the pump.

II 3GD c TX (for zone 2) **II 2GD c IIB T4 X (for zone 1)**

The valve seats are to be coupled to the balls and must ensure correct closing. Like the balls, they must be made from a material suitable for the fluid they come into contact with.

They open and close the flow of liquid as a result of the reciprocating movement of the follower plates. The material they are made from must be compatible with the fluid being pumped.

They can be threaded (G/BSP) or flanged, single, multiple and modular.

They are the only elastic parts of the pump, that suck and pump the liquid with their movement. The material they are made from must be selected in order to obtain the correct chemical compatibility with the liquid to be pumped.

It defines the inside diameter of the manifold.

These are all the rigid parts such as external flanges, manifolds and sleeves which are constantly in contact with the liquid to be pumped. Available in various materials, depending on the type of liquid.

This is the heart of the pump, responsible for the reciprocating movement that creates the flow of liquid.

These are not in contact with the pumped liquid, but only with the compressed air feeding the motor.

MATERIALS AND ATEX VERSIONS	MANIFOLD FOR INLET AND OUTLET	FLOW INSIDE DIAMETER	KIND OF MATERIALS					
			MOTOR	INNER FLANGES	PARTS IN CONTACT WITH THE FLUID	MEMBRANE	BALLS	SEATS
2B = Polypropylene for Zone 2	**1/** = threaded connection G/BSP	**16** = 1/2"	**1** = Nichel plat. aluminum	**1** = Nichel plat. aluminum	**1** = Nichel plat. aluminum	**E** = EPDM	**A** = Acetal	**A** = Acetal
	3/ = mult. threaded con. G/BSP	**26** = 1"				**H** = Hytrel®	**H** = Hytrel®	**H** = Hytrel®
3C = Aluminum for Zone 1	**4/** = connection with flange	**30** = 1.1/4"	**7** = polypropylene (motor and flanged are a single body)		**7** = Polypropylene	**N** = NBR	**S** = Santoprene™	**P** = Polypropylene
2A = Polypropylene	**6/** = multiple modular connection with flange	**40** = 1.1/2"				**S** = Santoprene™	**T** = PTFE	**S** = Santoprene™
		50 = 2"				**T** = PTFE + hytrel®		**I** = AISI 316 stainless steel
	7/ = dual inlet connection with flange							**5** = polypropylene and stainless steel AISI 316
	8/ = dual inlet G/BSP threaded connection							

EXEMPLE 3C1/16111EAA								
3C = Aluminum for Zone 1	**1/** = threaded connection G/BSP	**16** = 1/2"	**1** = Nichel plat. aluminum	**1** = Nichel plat. aluminum	**1** = Nichel plat. aluminum	**E** = EPDM	**A** = Acetal	**A** = Acetal

Installation and operation

SIMPLE AND EFFECTIVE (1:1 RATIO)

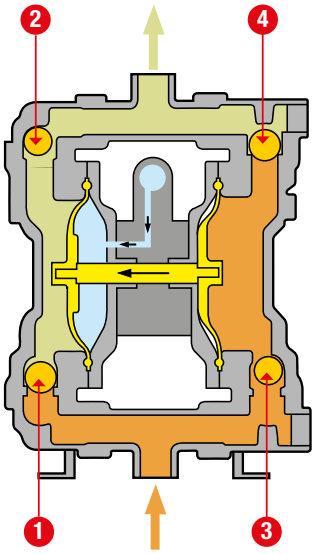

The slide valve of the air motor sends air (blue) to the left chamber which, pushing the membrane outwards, compresses the previously filled liquid (green). Through the effect of the pressure created valve ❶ closes and valve ❷ opens allowing the liquid to dispense (green). The right membrane then carries out the same movement by the shaft joining it to the left membrane, creating a vacuum. Through the effect of the vacuum, the valve ❸ opens and the valve ❹ closes, enabling suction of the liquid (orange).

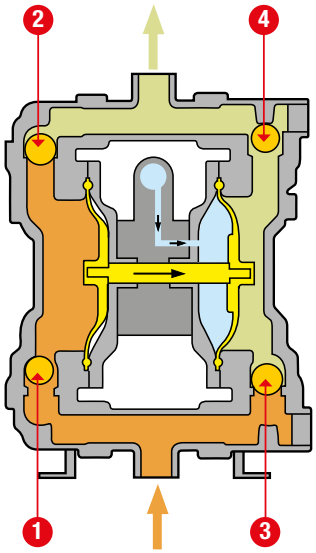

The slide valve of the air motor sends air (blue) to the right chamber which, pushing the membrane outwards, compresses the previously filled liquid (green). Through the effect of the pressure created valve ❸ closes and valve ❹ opens allowing the liquid to dispense (green). The left membrane then carries out the same movement by the shaft joining it to the right membrane, creating a vacuum. Through the effect of the vacuum, the valve ❶ opens and the valve ❷ closes, enabling suction of the liquid (orange).

PUMP INSTALLATION

ON DRUM (suitable with fluids with max viscosity 10000 cps, 20 °C)	**DUAL INLET SUCTION** (suitable with fluids with max viscosity 50000 cps, 20 °C)	**TOP FEED** (suitable with fluids with max viscosity 10000 cps, 20 °C)	**BOTTOM FEED** (suitable with fluids with max viscosity 50000 cps, 20 °C)
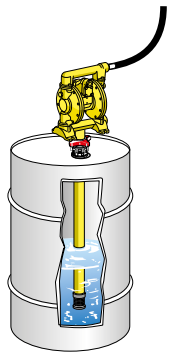	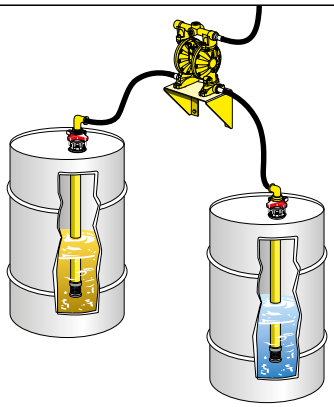	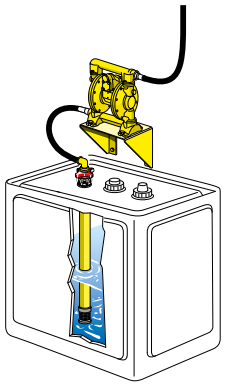	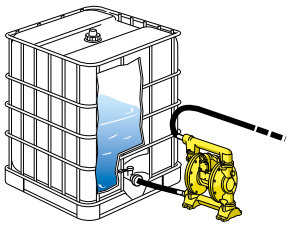

ON A MOBILE UNIT (suitable with fluids with max viscosity 10000 cps, 20 °C)	**SUBMERGED PUMP** (suitable with fluids with max viscosity 50000 cps, 20 °C)	**BULK TANK** (suitable with fluids with max viscosity 50000 cps, 20 °C)
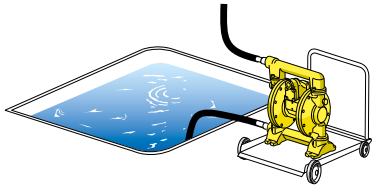	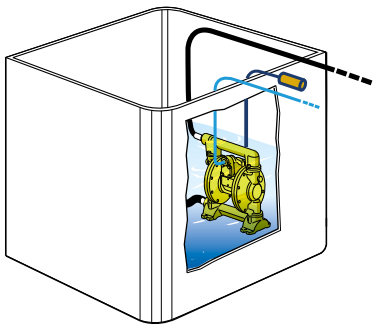	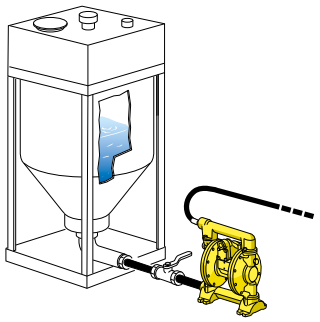

Wide choice of materials

PARTS IN CONTACT WITH FLUID

PUMP PARTS	MATERIALS	CHARACTERISTICS	TEMPERATURE MAX *
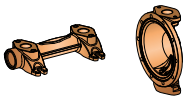	**Nickel-plated aluminum**	- average resistance to abrasion and corrosion - not intended for use with HHC (halogenated hydrocarbons)	+100 °C
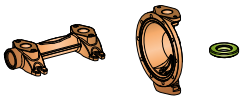	**Polypropylene**	- wide chemical compatibility - best alternative with aggressive fluids	+65 °C

CENTRAL MOTOR BLOCK

PUMP PARTS	MATERIALS	CHARACTERISTICS	TEMPERATURE MAX *
	Nickel-plated aluminum	- high mechanical strength - electrically conductive material for ATEX directive	+100 °C
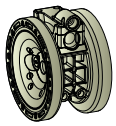	**Polypropylene**	- wide chemical compatibility - general use - cheaper solution	+65 °C

DIAPHRAGMS - SEATS - BALLS

	MATERIALS	CHARACTERISTICS AND STRENGHT POINTS	T° MAX *	DO NOT CHOOSE IF	SIMILAR NAMES ON THE MARKET
	High Nitrile NBR	- high resistance to alphatic hydrocarbons, oils and greases - good flexibility	+90 °C	you are looking for resistance to many chemical agents	**Buna - N Geolast**
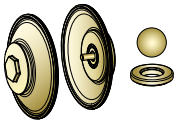	**Hytrel®**	- high tenacity and springback - high resistance to permanent deformation - good resistance to industrial chemical substances and solvents - excellent flexibility even at low temperature	+65 °C	you work at high temperatures	**Sani - flex**
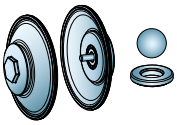	**Santoprene™**	- excellent flexural and fatigue strength - excellent resistance to abrasion and laceration - excellent resistance to acids, alkalis and ageing - also usable at high temperatures	+110 °C	you work with Kerosene, Diesel, Petrol, Freon, Benzene	**Wil - flex**
	EPDM	- good compatibility with organic and non-organic acids - excellent resistance to heat and steam - insensitive to the action of oxidising agents	+110 °C	you work with mineral oils and hydrocarbons	**Nordel Buna - Ep**
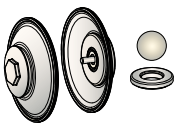	**PTFE**	- inert with nearly all chemical reagents - excellent heat resistance - excellent dielectric characteristics - excellent resistance to ageing	+120 °C	you work at low temperatures	**Teflon®**
	Acetal resin	- high fatigue strength - high compressive strength - good dimensional stability (low humidity absorption) - resistance to alcohols and organic compounds	+150 °C	you work in easy combustion environments	**Delrin**

* The materials in contact with the fluid, and the fluid as well, can restrict the pump working temperature

⚠ Use these pumps only with fluids with flash point not less than +55 °C

Guide to choosing a pump

HOW TO CHOOSE A PUMP SUITABLE FOR ONE'S NEEDS

PUMP SIZE	DELIVERY (FLOW RATE)	MAX Ø SOLID PARTS	SERIES		
			POLYPROPYLENE	POLYPROPYLENE AND ALUMINUM	ALUMINUM
1/2"	60 l/min	1,5 mm	-	120-PPAB	-
	65 l/min	1,5 mm	120-PPB	-	-
	70 l/min	1,5 mm	-	-	120-AB
1"	170 l/min	3 mm	-	1000-PPAB	1000-AB
	145 l/min	3 mm	1000-PPB	-	-
1.1/4"	200 l/min	3 mm	-	-	1140-AB
1.1/2"	480 l/min	5,5 mm	-	-	1120-AB
2"	580 l/min	6,5 mm	-	-	2000-AB flanged
	610 l/min	6,5 mm	-	-	2000-AB

TECHNICAL ASPECTS TO BE CONSIDERED FOR A CORRECT CHOICE OF PUMP

PUMP SIZE

The size of a pump is closely linked to its maximum delivery: in fact, the larger the pump the greater the delivery.

CHEMICAL COMPATIBILITY

Some parts of the pump are always in contact with the liquid to be pumped. Therefore the materials these parts are made from must be chemically compatible with the liquid.

DIMENSIONS OF SUSPENDED SOLIDS

The maximum dimensions possible for suspended solids in the fluid to be pumped are specified in the technical tables of each diaphragm pump.

WORKING TEMPERATURE

The maximum and minimum working temperatures take into account the physical characteristics of the various parts making up the pump and their interaction with the pumped liquid.

ABRASION RESISTANCE

If the fluid to be pumped is very abrasive, the wear on parts that deteriorate quickly (e.g. diaphragms, balls, seats) can be reduced by choosing a pump larger than required. In this way the speed of the fluid inside the pump will be lower, thereby reducing the abrasion on the parts in contact with it.

SYSTEM SIZE

In order to optimise the performance of the pump it is advisable to consider the following dimensional parameters relevant to the system:

1) Suction pipe: position the pump as close as possible to the point of suction; if this is not possible, the maximum vertical distance must not exceed, the limits reported in the technical table.

2) Delivery pipe: the pipe must be sized so as to avoid pressure losses; the internal diameter must be chosen according to the distance to be covered, the temperature and the viscosity of the fluid.

ATEX DIRECTIVE

PUMP FAMILY	DESCRIPTION	CERTIFICATION CLASS
ENTIRELY ALUMINUM SERIES	**Conductive material version** Built with central body and manifolds in conductive metallic material (aluminum)	**II 2GD c IIB T4 X** (zone 1)
ALUMINUM AND POLYPROPYLENE SERIES	**Partially conductive material version** Manifolds built with non-conductive plastic material (PP) and central body with conductive material (aluminum)	**IIB 3GD c TX** (zone 2)
ENTIRELY POLYPROPYLENE SERIES	Central body and manifolds in non-conductive plastic material (PP)	not certified

SPECIFIC TESTS AND OVERALL TESTING

The spare parts catalogue advantages

With a complete, intuitive and competitive catalogue the diaphragm pumps maintenance is every day easier and more profitable.

strength points

LONG-TERM QUALITY
The availability of spare parts kits extends the product's lifetime, improving the investment over time.

IMMEDIATE MAINTENANCE, AT THE WORKING SITE
Kits are easy to install, they don't need the presence of specialized technicians and they can be used at the working place.

SIMPLE AND EFFICIENT
The already available spare parts kits simplify the purchase procedure and make the stock more efficient.

POWER TO THE COLOURS
The colours in the exploded view make the consultation easy, evident and immediate.

ALWAYS AVAILABLE
The exploded view of all the catalogue's products can be downloaded on-line.

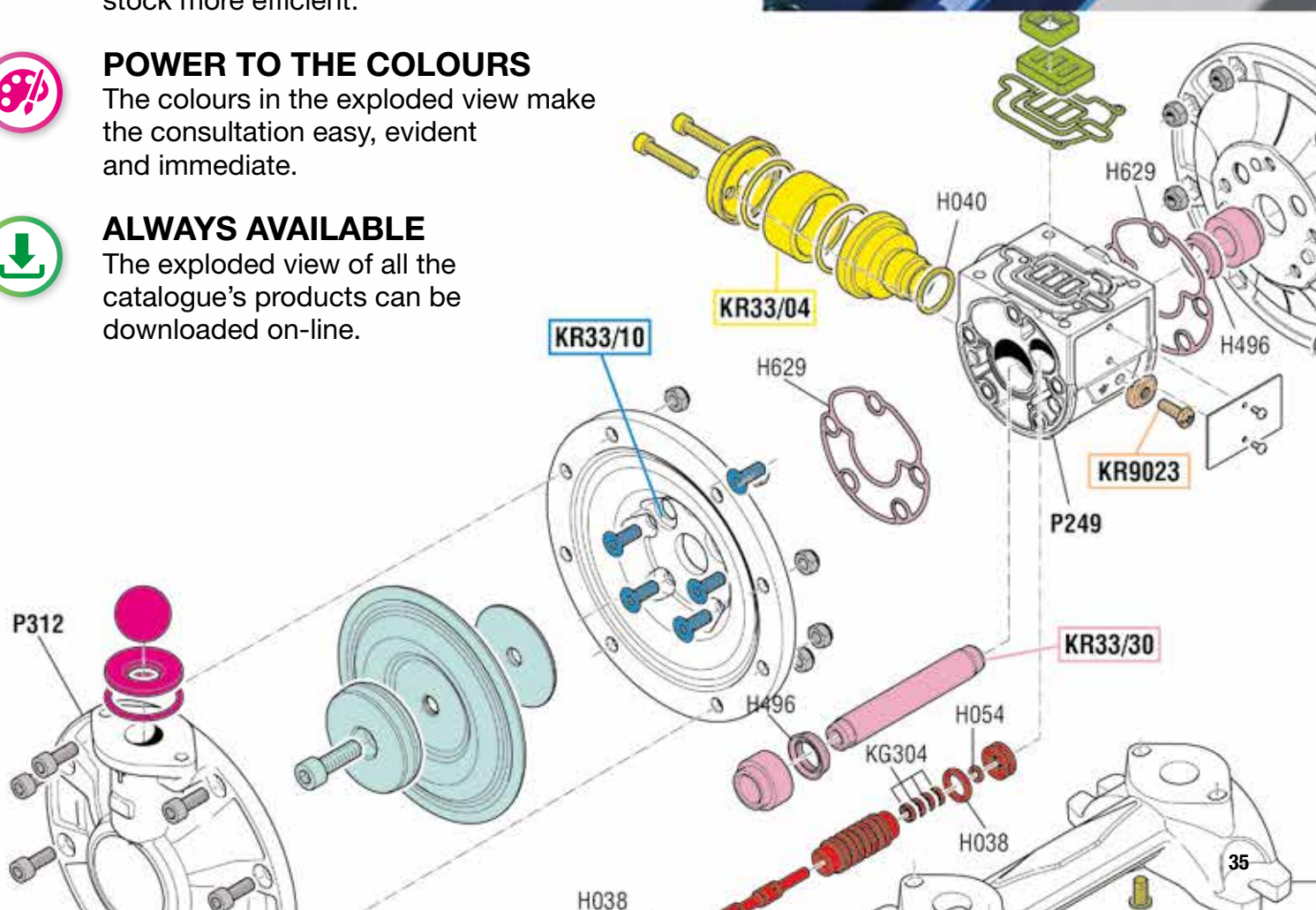

THREE WORDS TO DESCRIBE RAASM

Technology

The starting point for the entire manufacturing cycle is the research and development of cutting-edge solutions for products fully made in Italy.

Quality

One of our most important target is to offer high level of quality. Rigorous tests follow every single phase of the manufacturing process.

Efficiency

RAASM offers the most complete range of fluid management solutions suitable for many sectors. Our success is founded upon our ability to identify and fulfill specific customers' requirements.

Company with an ISO 9001:2015 certified quality management system

RAASM S.p.A.
36022 S. ZENO DI CASSOLA (VI)
Via Marangoni, 33 - ITALY

Export department
Tel. +39 0424 571130 - Fax +39 0424 571135

Technical department
Tel. +39 0424 571150 - Fax +39 0424 571155

info@raasm.com - www.raasm.com

GB WRCPM405/PM-GB

Authorized distributor

All rights reserved to Raasm S.p.A.